HIWATT

Two-Input Preamp "Jimmy Page"
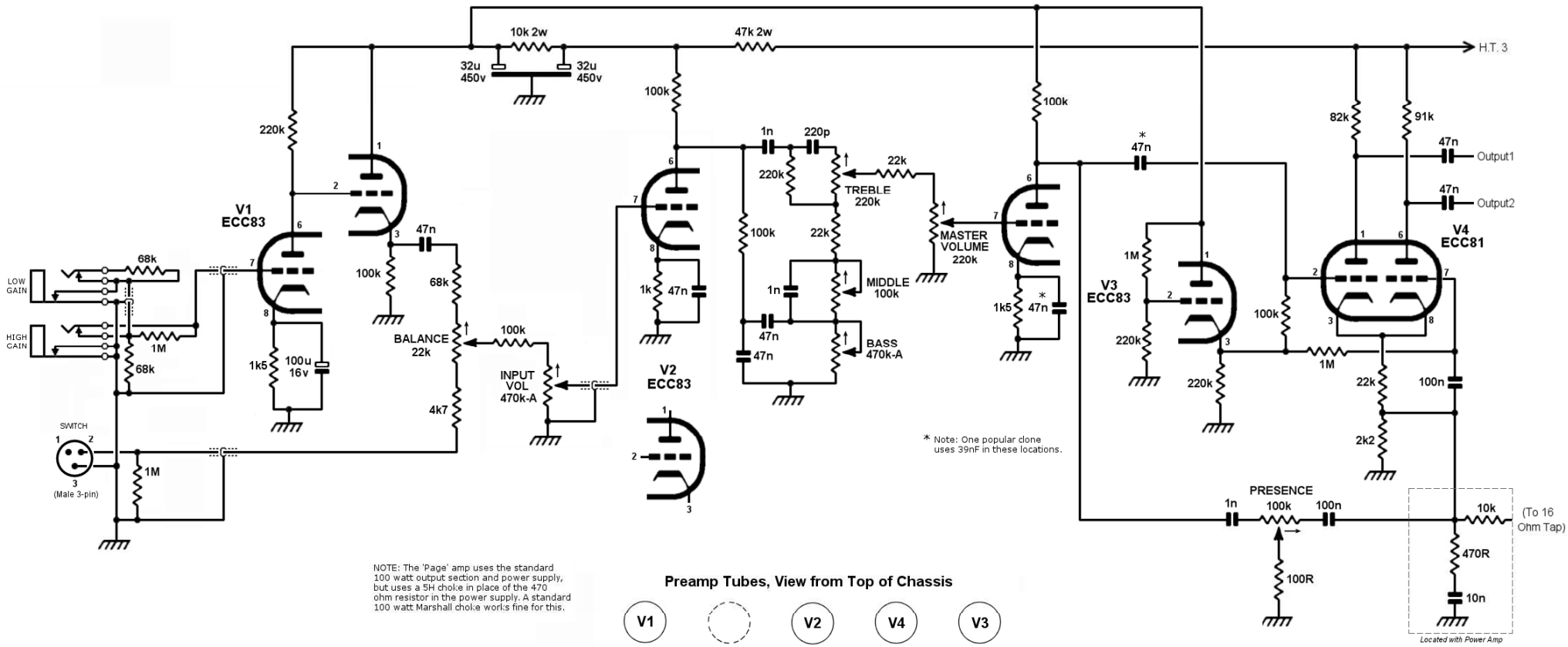
Drawing v 1.4 - Mark Huss