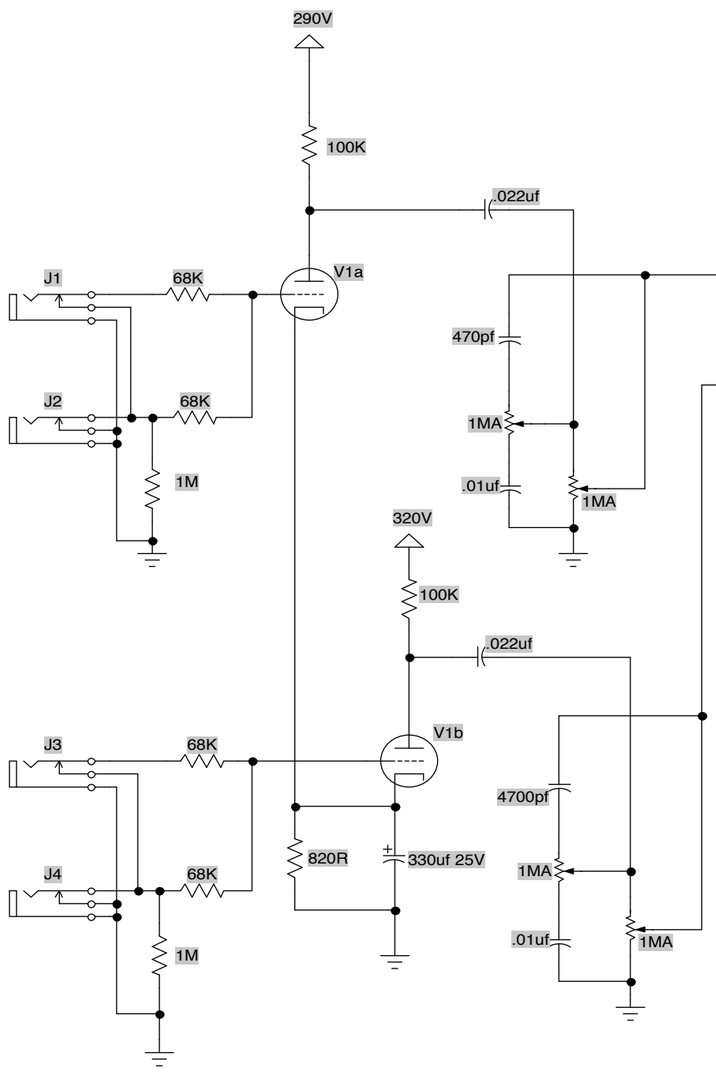

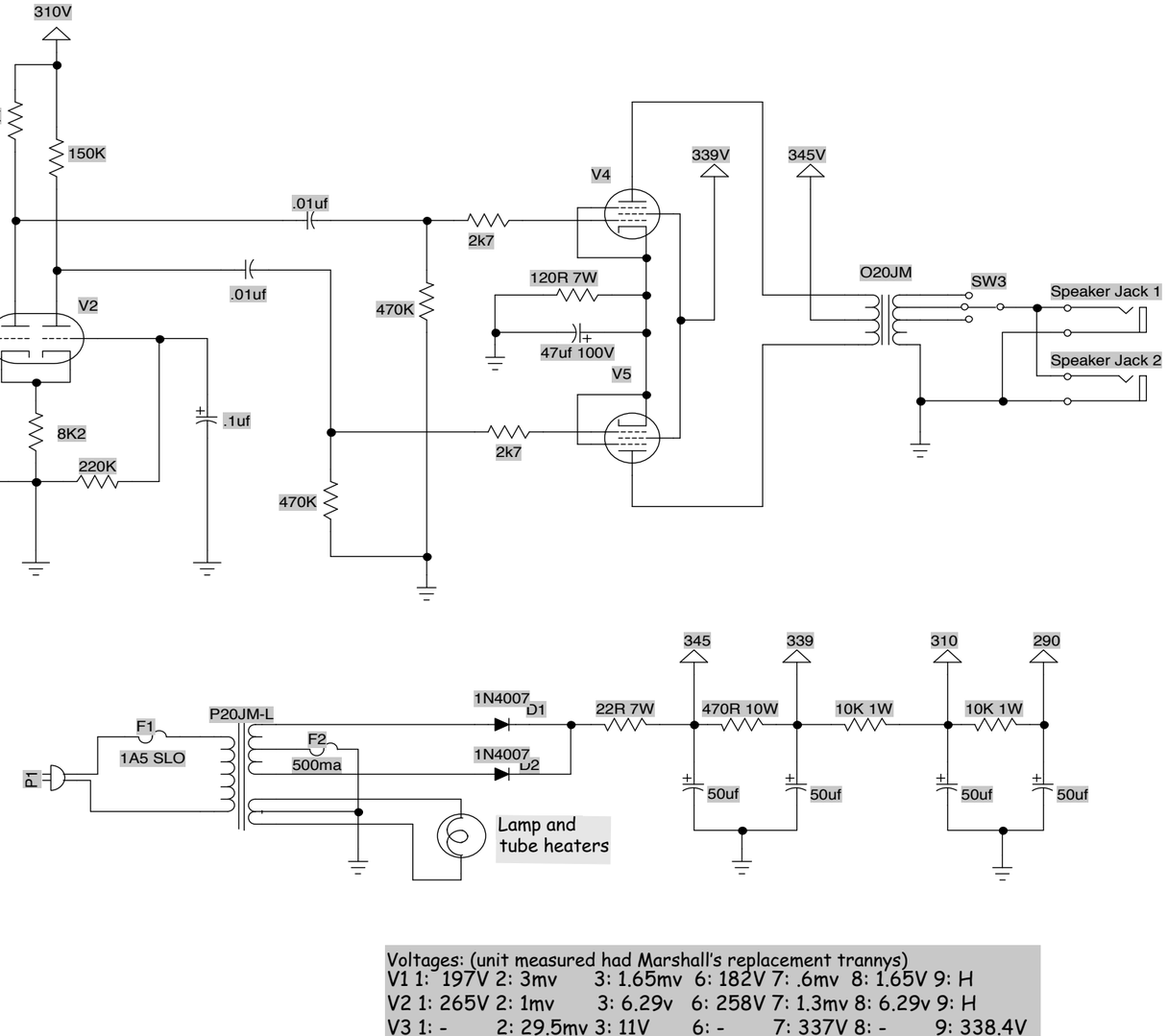

V1, V2 12AX7A, ECC83
V3, V4 6BQ5, EL84
10K 1W Carbon Film 10% - OEM Xicon 1W
470R 10W Wirewound 5% -OEM Tyco C10410RJ
22R 7W Wirewound 5% - OEM Tyco C722RJ
120R 7W Wirewound 5% - OEM Tyco C7120RJ
All other resistors 1/2 Watt Carbon Film - OEM Xicon
4700pf, .022uf, .01uf, .1uf 630V - OEM ERO 1813, Mallory 150M, or Sozo, etc.
470pf Fu-Jack 0412 OEM (or other Taiwanese equivalent)
Power Transformer - Marshall OEM, or Mercury Magnetics P20JM
Output Transformer - Marshall OEM, or Mercury Magnetics O20JM-L

Voltages: (unit measured had Marshall's replacement trannys)

V1	1: 197V	2: 3mv	3: 1.65mv	6: 182V	7: .6mv	8: 1.65V	9: H
V2	1: 265V	2: 1mv	3: 6.29v	6: 258V	7: 1.3mv	8: 6.29v	9: H
V3	1: -	2: 29.5mv	3: 11V	6: -	7: 337V	8: -	9: 338.4V
V4	1: -	2: 20.0mv	3: 11V	6: -	7: 337v	8:-	9: 337.6V

20 watt 61x-ray Lead & Bass Amplifier

Drawn by Michael Corrieri
mickey@soultoneamps.com
© 2007 by Soultone Amplification, Inc.