LAST REFNUM USED: R176 C167 CR54 J173 V6 Q11 VR16

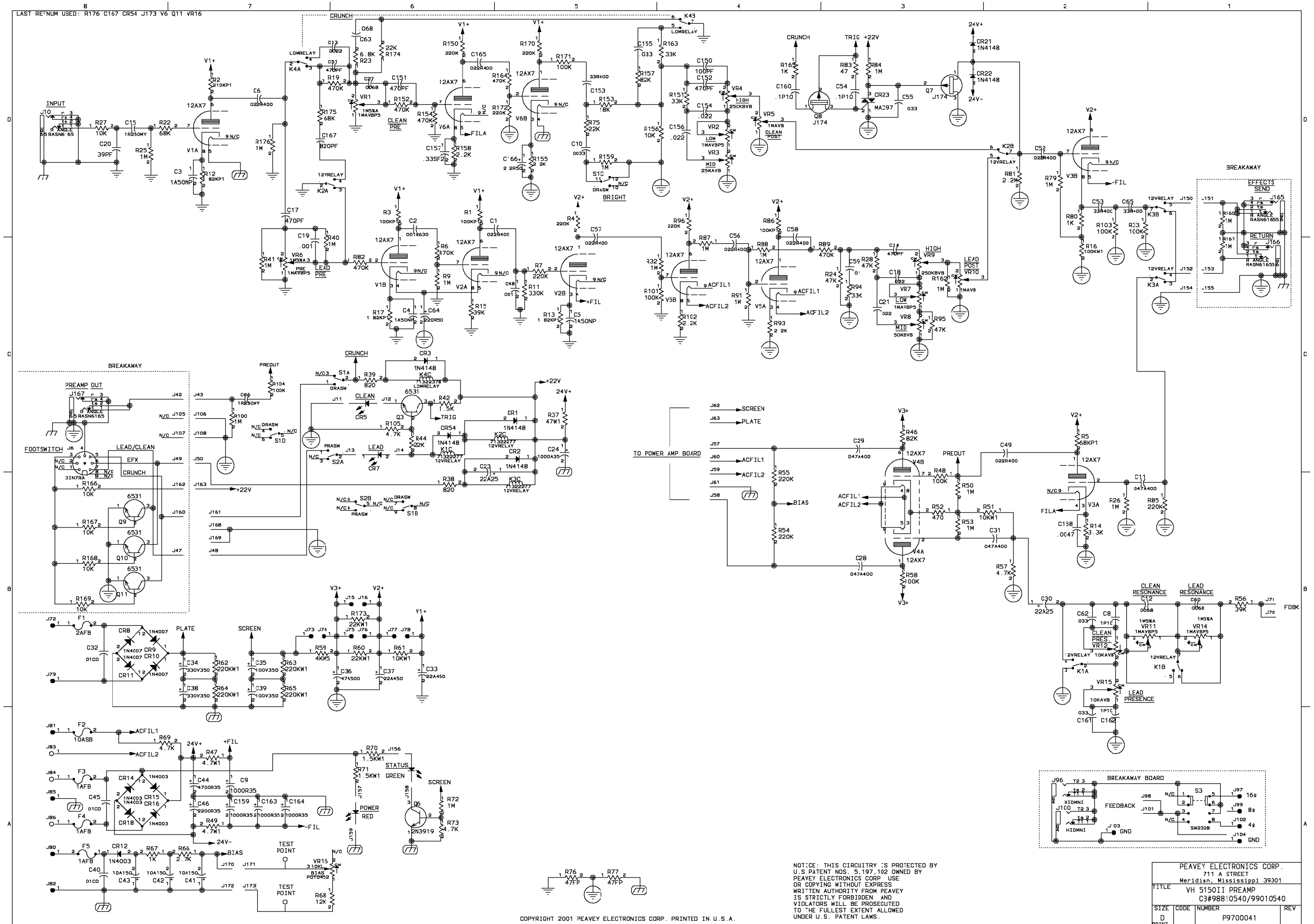

NOTICE: THIS CIRCUITRY IS PROTECTED BY U.S PATENT NOS. 5,197,102 OWNED BY PEAVEY ELECTRONICS CORP USE OR COPYING WITHOUT EXPRESS WRITTEN AUTHORITY FROM PEAVEY IS STRICTLY FORBIDDEN AND VIOLATORS WILL BE PROSECUTED TO THE FULLEST EXTENT ALLOWED UNDER U.S. PATENT LAWS.

COPYRIGHT 2001 PEAVEY ELECTRONICS CORP. PRINTED IN U.S.A.

PEAVEY ELECTRONICS CORP.
711 A STREET
Meridian, Mississippi 39301

TITLE: VH 5150II PREAMP
C3#98810540/99010540

SIZE	CODE	NUMBER	REV
D		P9700041	

PRINT DATE FEB-16-2001 SHEET 1 OF 1

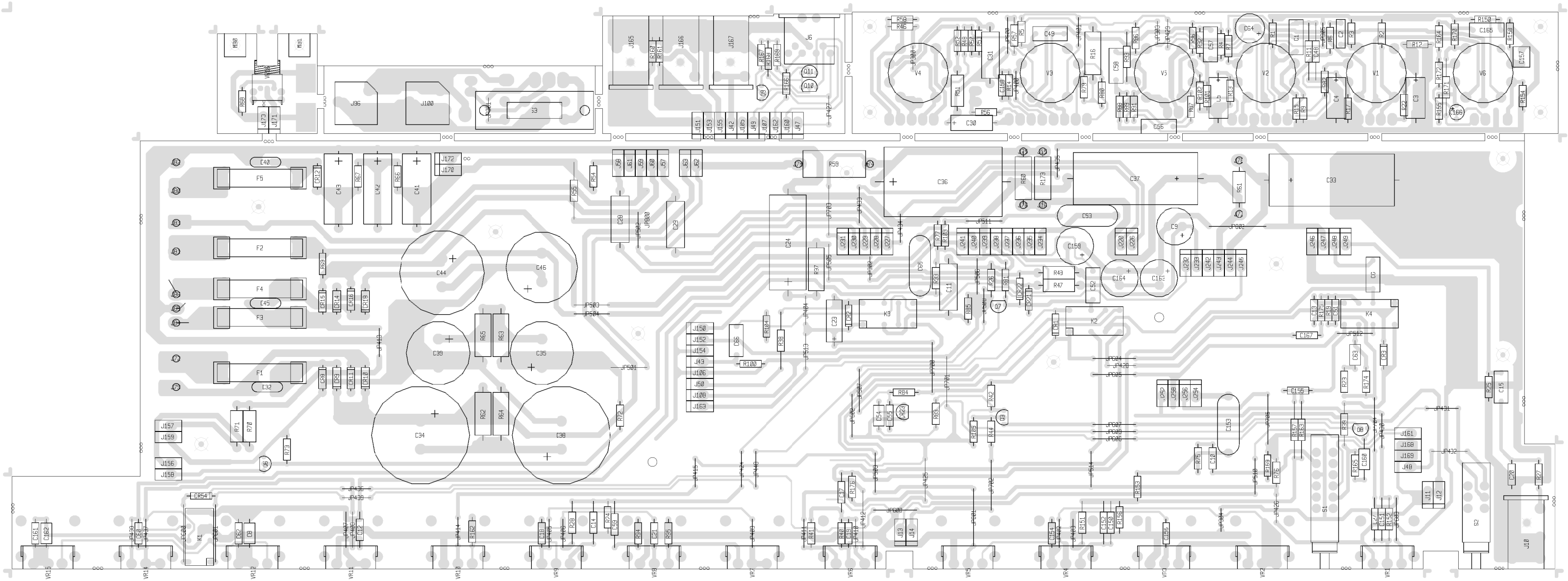

5150-2 PREAMP PRIMARY SIDE

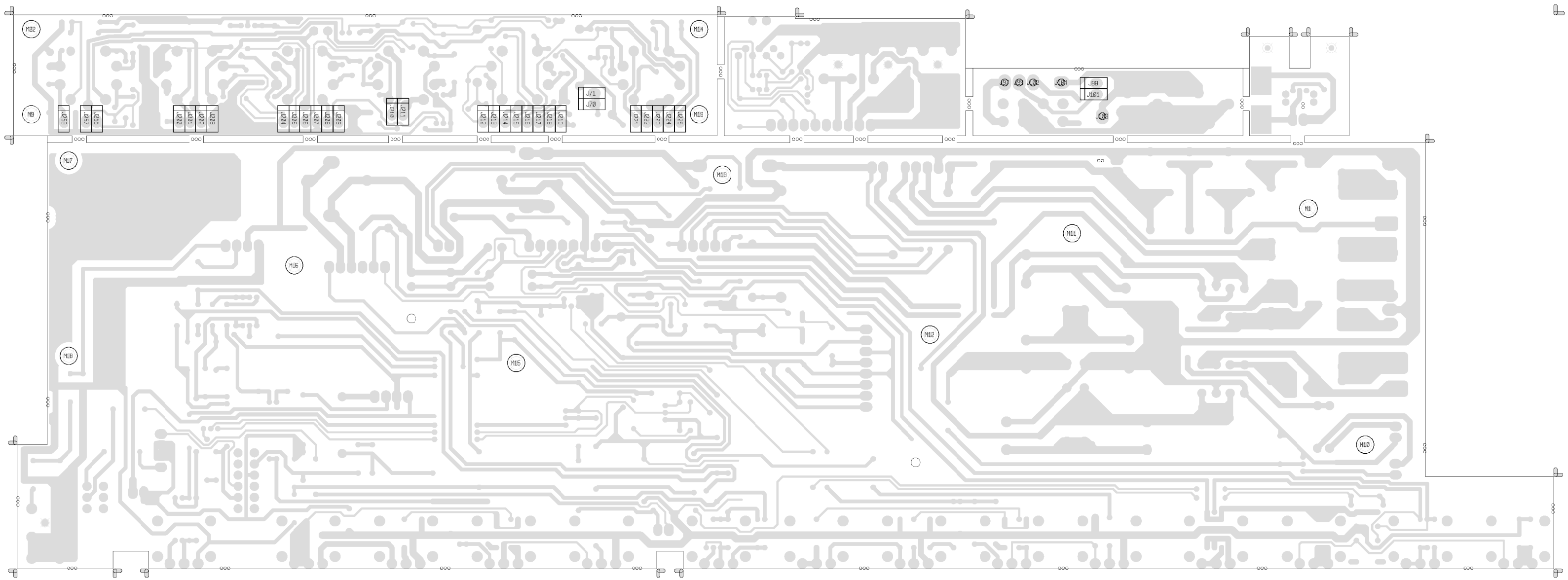

5150-2 PREAMP SECONDARY SIDE

B I L L O F M A T E R I A L S R E P O R T

BOARD NAME: 5150_2 REPORT DATE: 25JAN01
ASSEMBLY LEVEL NUMBER: 99010540 PROJECT NUMBER: P9700041

** QTY.	PART NAME	PART VALUE	DESCRIPTION AND NUMBER	CBDS DEVICE DESIGNATIONS **********
1	98810540	98810540	PVR PCB	
2	.001	.001	70340000 .001MF----10%----50VDC----MON----T&R	C19, C48
1	.001R630	.001R630	70320160 .001MFD 630VDC B-BOX	C2
1	.0022	.0022	70340004 .0022MF---10%----50VDC----T/C----T&R	C13
1	.0033	.0033	70340006 .0033MF---10%----50VDC----T/C----T&R	C10
1	.0047	.0047	70340007 .0047MF---10%----50VDC----MON----T&R	C158
3	.0068	.0068	70340008 .0068MF---10%----50VDC----MON----T&R	C12, C27, C60
1	.01	.01	70340011 .01MF-----10%----50VDC----T/C----T&R	C59
3	.01CD	.01CD	70320248 .01MF----20%---1000VDC---CD--T&A	C32, C40, C45
4	.022	.022	70340012 .022MF----10%----50VDC----MON----T&R	C18, C21, C154, C156
8	.022R400	.022R400	70320106 .022 MFD 400V RADIAL MYLAR	C1, C6, C49, C52, C56, C57, C58, C165
4	.033	.033	70340014 .033MF----10%----50VDC----MON----T&R	C55, C62, C155, C161
4	.047A400	.047A400	70320105 .047MFD 450 VOLT T&R CAP	C11, C28, C29, C31
1	.068	.068	70340018 .068MF----10%----50VDC----MON----T&R	C63
4	.1P10	.1P10	70340101 .1MF------10%----50VDC----MON----T&R	C8, C54, C160, C162
2	.1R250MY	.1R250MY	70320096 .1 MFD 250VDC MYLAR CA/BR	C15, C66
3	.33R400	.33R400	70320107 .33MF-----10%----400VDC---MYLAR--R/W	C53, C65, C153
1	.33SF2	.33SF2	70330146 .33MF 5% 100VDC SF T&A	C157
1	1.5K	1.5K	70240018 1.5K--1/4W--5%----CF--T&R	R42
2	1.5KW1	1.5KW1	70210007 1.5K--1W----5%----MO--T&R	R70, R71
3	1.82KP1	1.82KP1	70241078 1.82K-1/4W--1%----CF--T&R	R12, R13, R17
1	1000A35	1000A35	70320038 1000 MFD 35VDC LYTIC CAP	C24
4	1000R35	1000R35	70320186 1000MF----20%----35VDC--EL--T&A	C9, C159, C163, C164
7	100K	100K	70240034 100K--1/4W--5%----CF--T&R	R33, R48, R58, R101, R103, R104, R171
3	100KP1	100KP1	70240151 100K--1/4W--1%----MF--T&R	R1, R3, R86
1	100KW1	100KW1	70210017 100K--1W----5%----MO--T&R	R16
1	100PF	100PF	70340054 100PF-----10%----50VDC----T/C----T&R	C150
2	100V350	100V350	70320130 100 MFD 350VDC RADIAL SNAP-IN	C35, C39
3	10A150	10A150	70320016 10 MFD 150VDC LYTIC - AXIAL LEAD	C41, C42, C43
1	10ASB	10ASB	70900599 10 AMP S/B FUSE WITH 2 FUSECLIPS #70900816	F2
6	10K	10K	70240025 10K---1/4W--5%----CF--T&R	R27, R156, R166, R167, R168, R169
2	10KAVB	71190528	71190528 10K 20% AUD MIN VPC W/BRACKET	VR12, VR15
2	10KW1	10KW1	70210018 10K---1W----5%----MO--T&R	R51, R61
4	125SOWD	70900788	70900788 SPACER, 1/8,R(#4),.187 SWAGE ALUM.	M9, M14, M19, M22
6	12AX7	12AX7	70806612 12AX7 VACUUM TUBE W/9 PIN PC MNT SOCKET	V1, V2, V3, V4, V5, V6
1	12K	12K	70240057 12K---1/4W--5%----CF--T&R	R68
3	12VRELAY	71322277	71322277 DPDT OMRON RELAY 12VDC	K1, K2, K3
1	18K	18K	70240028 18K---1/4W--5%----CF--T&R	R153
3	1A50NP	1A50NP	70320138 1MFD 10% 50VNP EL T&R	C3, C4, C5
3	1AFB	1AFB	70900085 AGC 1 AMP FUSE with 2 fuseclips #70900816	F3, F4, F5
3	1K	1K	70240017 1K----1/4W--5%----CF--T&R	R67, R80, R165
20	1M	1M	70240039 1M----1/4W--5%----CF--T&R	R9, R25, R26, R32, R40, R41, R50, R53, R72, R79, R84, R87, R88, R91, R100, R159, R160, R161, R162, R176
2	1MAVB	71190516	71190516 1 MEG AUD MIN VPC 20% W/BRKT	VR5, VR10
6	1MAVBP5	71190522	71190522 1 MEG AUD MIN VPC 5% TAPER W/BRKT	VR1, VR2, VR6, VR7, VR11, VR14
5	1N4003	1N4003	70464003 1N4003 200V SILICON DIODE	CR12, CR14, CR15, CR16, CR18
4	1N4007	1N4007	70464007 1N4007 1KV, 1A, SILICON DIODE	CR8, CR9, CR10, CR11
6	1N4148	4148	70464148 1N4148 75V 10MA SILICON DIODE	CR1, CR2, CR3, CR21, CR22, CR54
4	2.2K	2.2K	70240020 2.2K--1/4W--5%----CF--T&R	R93, R102, R155, R158
1	2.2M	2.2M	70240040 2.2M--1/4W--5%----CF--T&R	R81
1	2.2R50	2.2R50	70320180 2.2MF-----20%----50VDC---EL--T&A	C166
1	2.7K	2.7K	70240021 2.7K--1/4W--5%----CF--T&R	R66
1	210KP1	210KP1	70240137 210K 1% 1/4W MF T&R	R2
1	2200R35	2200V35	70320113 2200 MFD 35VDC RADIAL LYTIC	C46
9	220K	220K	70240036 220K--1/4W--5%----CF--T&R	R4, R7, R54, R55, R85, R96, R150, R170, R172
4	220KW1	220KW1	70210008 220K--1W----5%----MO--T&R	R62, R63, R64, R65
1	220R50	220R50	70320187 220MF-----20%----50VDC---EL--T&A	C64
2	22A25	22A25	70320012 22MFD +/-20% 25VDC EL AXL	C23, C30
2	22A450	22A450	70320020 22 MFD 450VDC LYTIC CAP	C33, C37
3	22K	22K	70240029 22K---1/4W--5%----CF--T&R	R44, R75, R174
2	22KW1	22KW1	70210005 22K---1W----5%----MO--T&R	R60, R173
2	250KBVB	71190515	71190515 250K LIN MIN VPC W/BRACKET	VR4, VR9
1	25KAVB	71190559	71190559 25KA MIN VPC W/BRACKET	VR3
1	2AFB	2AFB	70900133 AGC 2 AMP FUSE	F1
1	2N3919	3919	70463919 SKA-3919 TO92 NPN TRANS T&A	Q6
1	3.3K	3.3K	70240022 3.3K--1/4W--5%----CF--T&R	R14

1 330K 330K 70240037 330K--1/4W--5%----CF--T&R
R11

2 330V350 330V350 70320169 330 MFD 350 VDC VERT. SNAP-IN
C34, C38

3 33K 33K 70240030 33K---1/4W--5%----CF--T&R
R94, R151, R163

2 39K 39K 70240048 39K---1/4W--5%----CF--T&R
R15, R56

1 39PF 39PF 70340052 39PF----------50VDC----T/C----T&R
C20

4 4.7K 4.7K 70240023 4.7K--1/4W--5%----CF--T&R
R57, R69, R73, R105

2 4.7W1 4.7W1 70210015 4.7---1W----5%----MO--T&R
R47, R49

1 47 47 70240008 47----1/4W--5%----CF--T&R
R83

1 470 470 70240015 470---1/4W--5%----CF--T&R
R52

1 4700R35 4700R35 70350200 4700 MFD 35VDC RADIAL SNAP-IN
C44

7 470K 470K 70240038 470K--1/4W--5%----CF--T&R
R6, R19, R82, R89, R152, R154, R164

5 470PF 470PF 70340058 470PF-----10%----50VDC----T/C----T&R
C14, C17, C51, C151, C152

1 47A500 47A500 70320005 47MF 500VDC ELECTROLYTIC -AXIAL
C36

2 47FP 47FP 70240090 47FP--1/4W--5%----FP--T&R
R76, R77

3 47K 47K 70240031 47K---1/4W--5%----CF--T&R
R24, R28, R95

1 47W1 47W1 70210011 47----1W----5%----MO--T&R
R37

1 4KW5 4KW5 70250050 4K--5W--10%--WW--AXL
R59

9 500SOWD 70900781 70900781 SPACER, 1/2,R(#4),.187 SWAGE ALUM.
M1, M10,
M11, M12, M13, M15, M16, M17, M18,

1 50KBVB 71190511 71190511 50K LIN MIN VPC W/BRACKET
VR8

1 6.8K 6.8K 70240024 6.8K--1/4W--5%----CF--T&R
R23

4 6531 6531 70466531 MPS-6531 TO92 NPN TRANS. T&A
Q3, Q9, Q10, Q11

2 68K 68K 70240032 68K---1/4W--5%----CF--T&R
R22, R175

1 68KP1 68KP1 70241070 68K---1/4W--1%----CF--T&R
R5

2 820 820 70240019 820---1/4W--5%----CF--T&R
R38, R39

1 820PF 820PF 70340062 820PF-----10%----50VDC----T/C----T&R
C167

2 82K 82K 70240033 82K---1/4W--5%----CF--T&R
R46, R157

1 DIN7RA 71466226 71466226 CONN 7P R/A PCMNT DIN W/ 4 MNT. HOLES
J6

1 DRASW DRASW 71322256 PC MNT SWITCH DUAL
S1

3 FMPU 73711811 73711811 M118-171 C.B. FEMALE MOLEX PIN
J83, J84, J86

2 HIDMNI 71466214 71466214 2 TIP HID JACK NINS W/SPD
J96, J100

2 J174 J174 70460174 J-174 30V TO-92 P-CHAN FET T&A
Q7, Q8

2 LBRKT1 71500238 71500238 #74 L-BRACKET W/4-40 HOLE
M30, M31

1 LOMRELAY 71322378 71322378 RELAY, 12V DPDT - LO MIC
K4

1 MAC97 MAC97 70460097 MAC97-6 400V .6A TO-92 TRIAC T&A
CR23

5 MMPD 73711812 73711812 R93-12 PN C.B. MALE MOLEX PIN
J97, J99, J102, J103, J104

14 MMPU 73711812 73711812 R93-12 PN C.B. MALE MOLEX PIN
J15, J16, J72, J73, J74, J75, J76, J77,
J78, J79, J80, J81, J82, J85

1 POT0452 71190452 71190452 10kb vpc 6.5mm
VR16

1 PRASW PRASW 71322289 DPDT P/P CB MNT SWITCH
S2

4 RASN6165 71466165 71466165 JK R/A 12.5MM NIN STEREO -88
J10, J165, J166, J167

102 SPX1 SPX1 73717003 1 STAKE PIN
J11, J12, J13, J14, J42, J43, J47, J48,
J49, J50, J57, J58, J59, J60, J61, J62,
J63, J70, J71, J98, J101, J105, J106,
J107, J108, J150, J151, J152, J153,
J154, J155, J156, J157, J158, J159,
J160, J161, J162, J163, J168, J169,
J170, J171, J172, J173, J200, J201,
J202, J203, J204, J205, J206, J207,
J208, J209, J210, J211, J212, J213,
J214, J215, J216, J217, J218, J219,
J220, J221, J222, J223, J224, J225,
J226, J227, J228, J229, J230, J231,
J232, J233, J234, J235, J236, J237,
J238, J239, J240, J241, J242, J243,
J244, J245, J246, J247, J248, J249,
J252, J253, J254, J255, J256, J257,
J258,

1 SW2328 SW2328 71322328 2PTT PC MOUNT SLIDE SWITCH
S3

****
* END OF BILL OF MATERIALS REPORT *
****

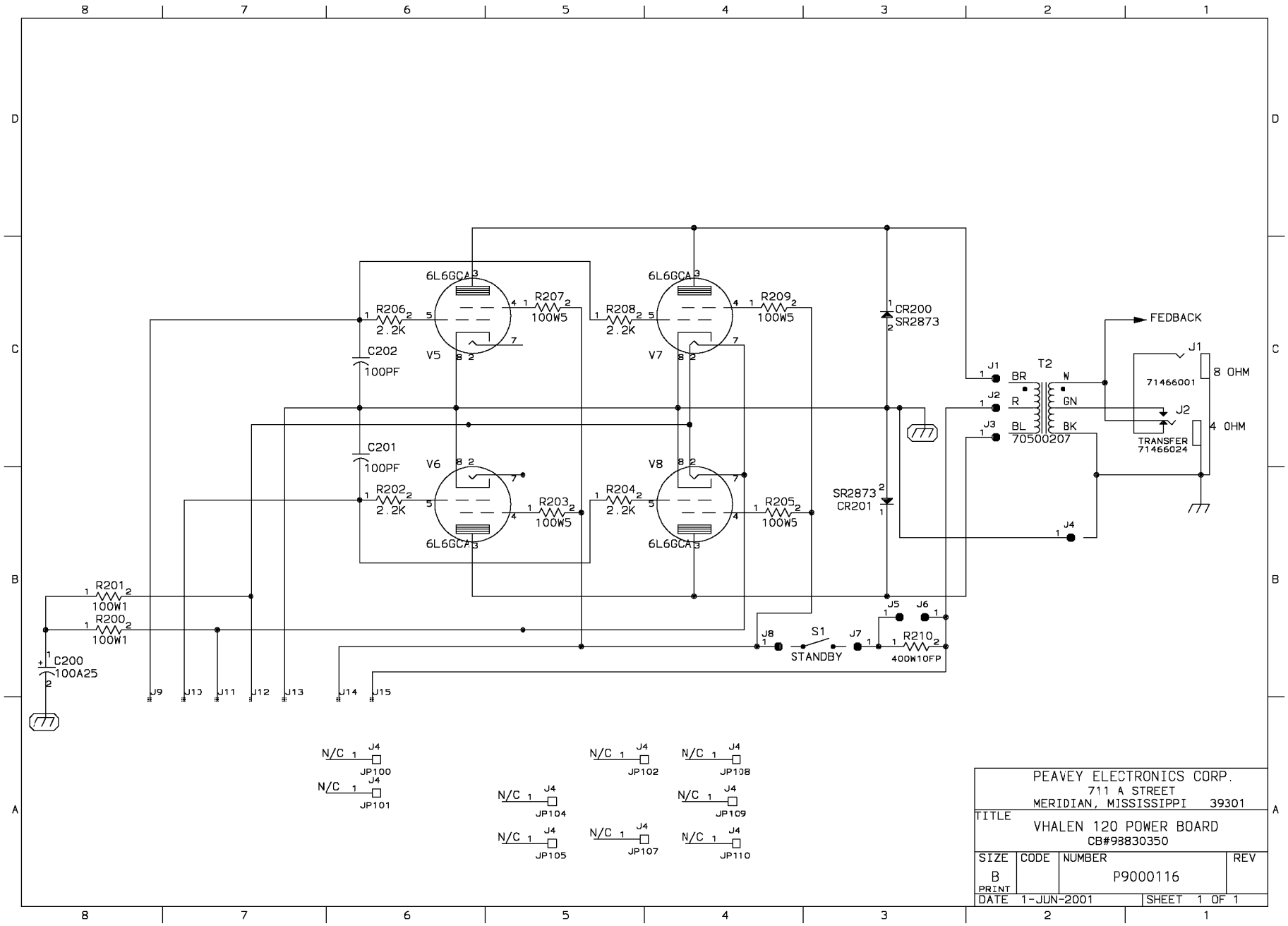

PEAVEY ELECTRONICS CORP.
711 A STREET
MERIDIAN, MISSISSIPPI 39301

TITLE
VHALEN 120 POWER BOARD
CB#93830350

SIZE	CODE	NUMBER	REV
B PRINT		P9000116	
DATE 1-JUN-2001		SHEET 1 OF 1	

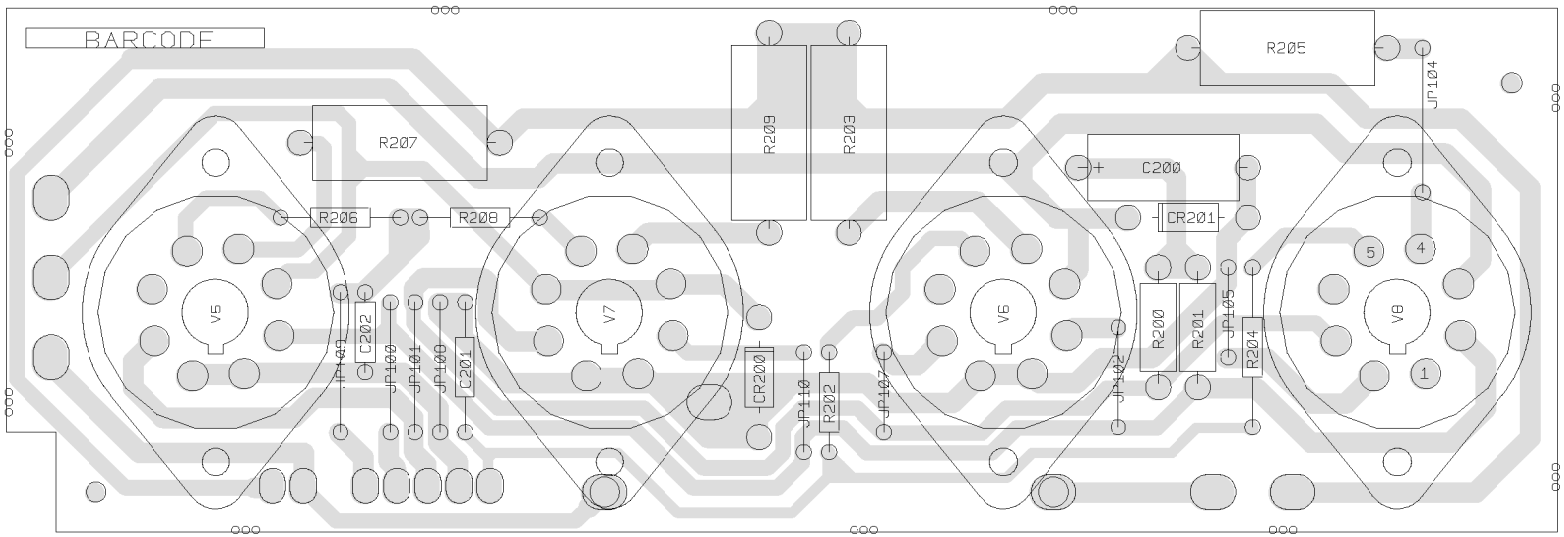

PRIMARY SIDE

EVH POWER

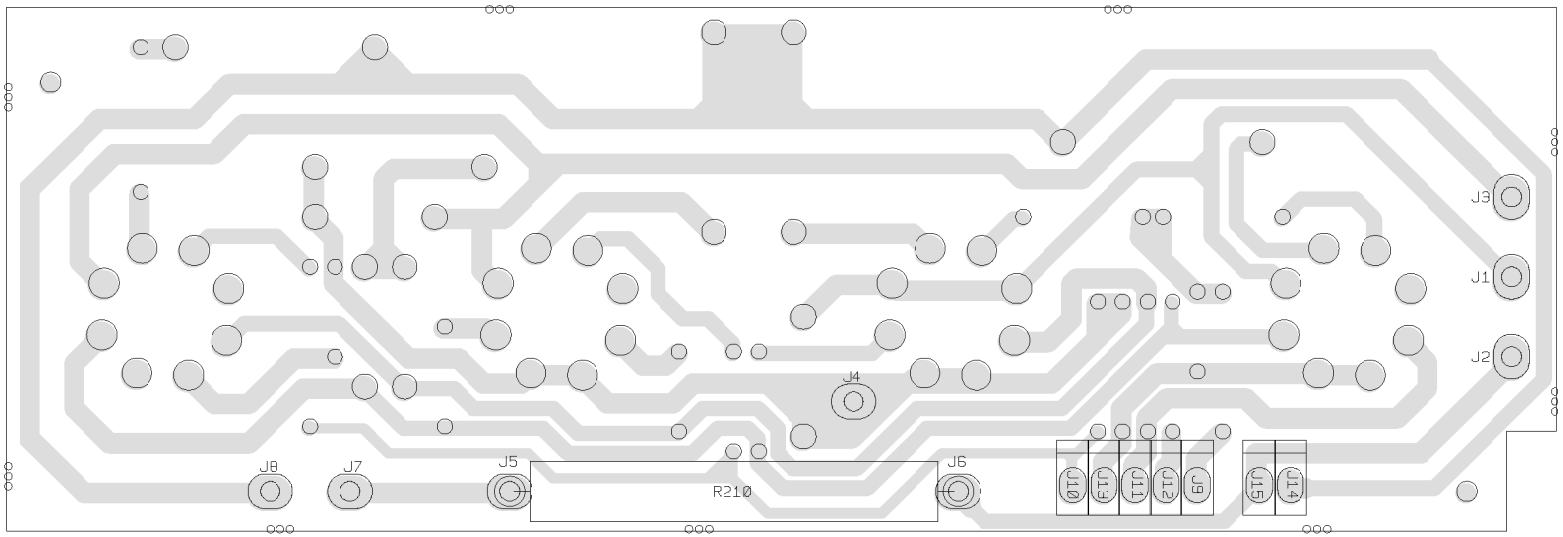

SECONDARY SIDE

B I L L O F M A T E R I A L S R E P O R T

BOARD NAME: VHPWR REPORT DATE: 29AUG01

ASSEMBLY LEVEL NUMBER: 99030352 DESIGNER: FREDDIE EAVES

PROJECT NUMBER: VHPWR

CBDS

** QTY.	PART NAME	PART VALUE	PART NUMBER	DESCRIPTION AND DEVICE DESIGNATIONS **********
1	98830352	98830352	VHPWR	PCB
1	100A25	100A25	70320014	100 MFD 25VDC LYTIC CAP C200
2	100PF	100PF	70340054	100PF-----10%----50VDC----T/C----T&R C201, C202
2	100W1	100W1	70210003	100---1W----5%----MO--T&R R200, R201
4	100W5	100W5	70250006	100--5W--10%--WW--AXL

				R203, R205, R207, R209
4	2.2K	2.2K	70240020	2.2K--1/4W--5%----CF--T&R
				R202, R204, R206, R208
1	400W10FP	400W10FP	70250019	400--10W--10%--FP--AXL
				R210
4	6L6GCA	6L6GCA	70806604	6L6GC VAC TUBE W/INS SOCKET 70806627
				V5, V6, V7, V8
9	J4	J	70600005	22GA JUMPER WIRES T&R
				JP100, JP101, JP102, JP104, JP105, JP107, JP108, JP109, JP110
8	MMPD	73711812	73711812	R93-12 PN C.B. MALE MOLEX PIN
				J1, J2, J3, J4, J5, J6, J7, J8
7	SPX1D	SPX1D	73717003	1 STAKE PIN
				J9, J10, J11, J12, J13, J14, J15
2	SR2873	SR2873	70402873	SR2873 2KV, 250MA SILICON DIODE

****

* END OF BILL OF MATERIALS REPORT *

****

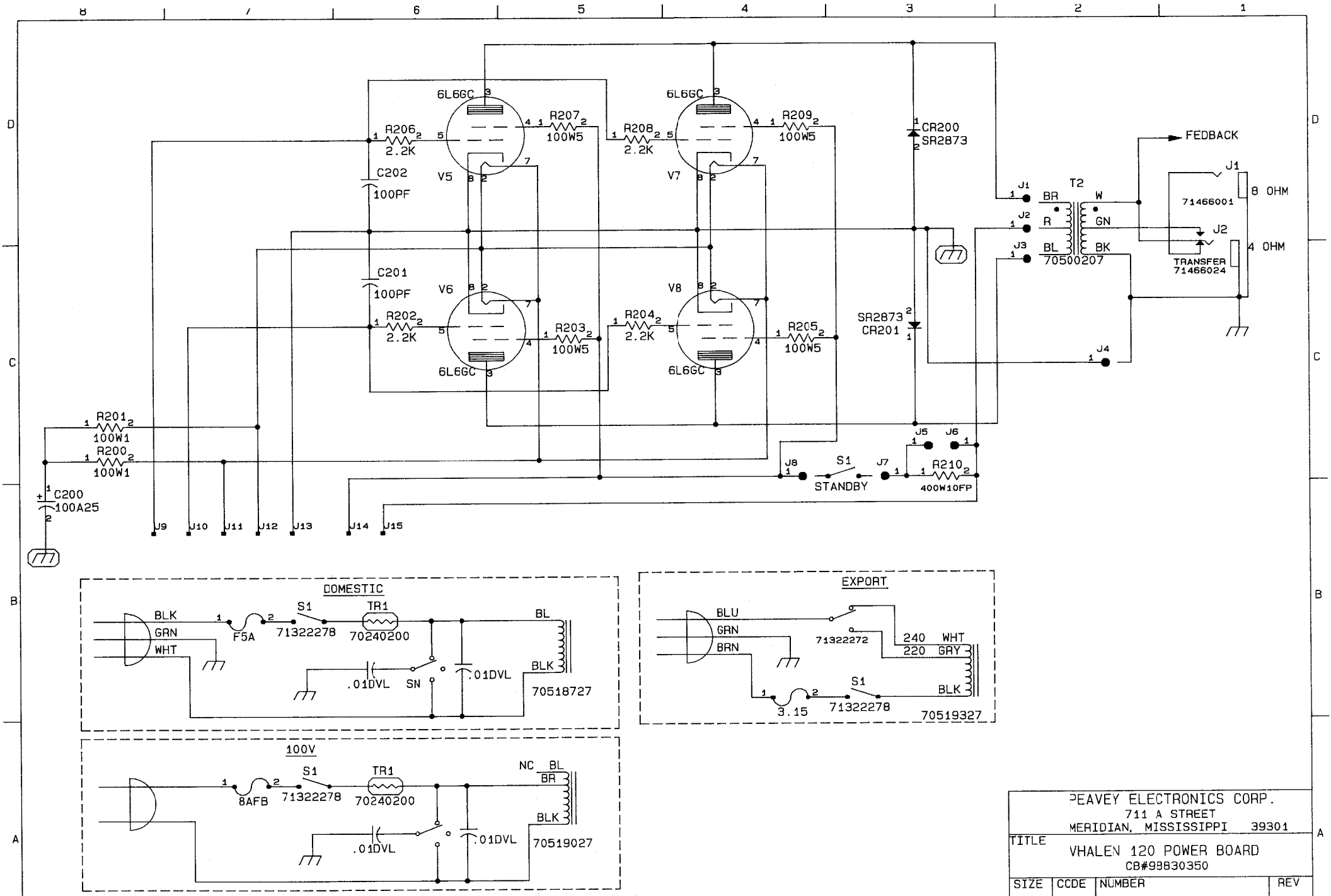

COPYRIGHT 1992 PEAVEY ELECTRONICS CORP. PRINTED IN U.S.A.

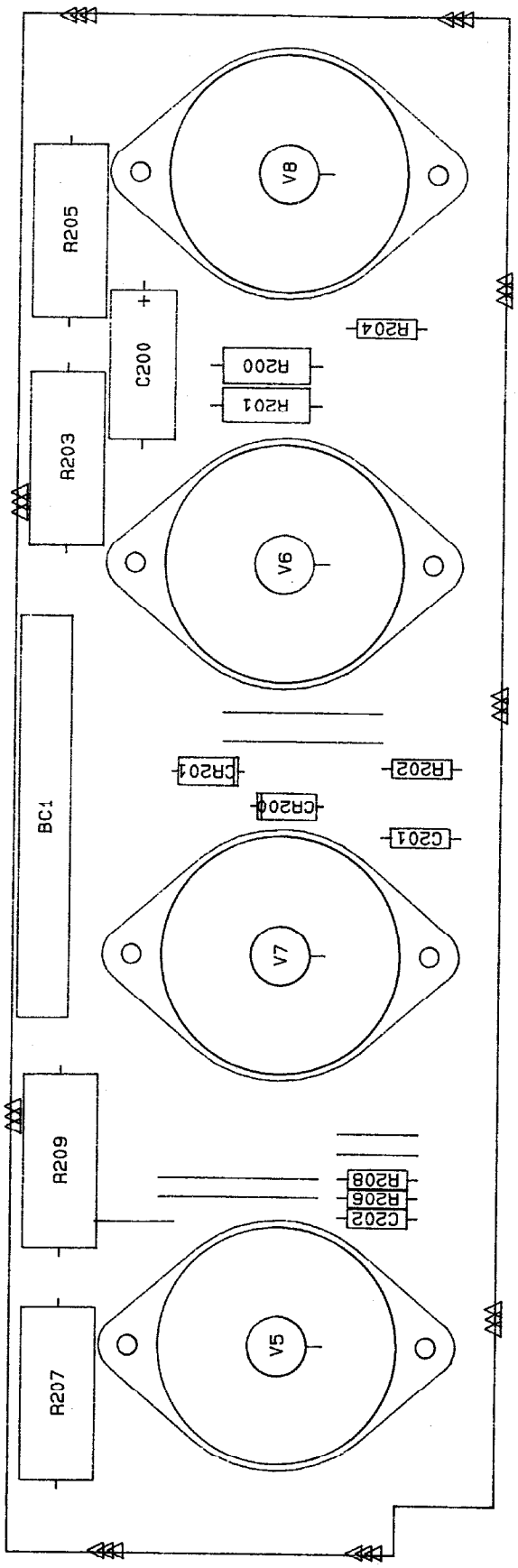

POWER BD.

C200	100A25	70320014	100 MFD 25 VDC LYTIC CAP
C201	100PF	70340054	100PF 10% 50V TUB CER T&R
C202	100PF	70340054	100PF 10% 50V TUB CER T&R
CR200	SR2873	70402873	SR-2873 2KV,250MA SIL DIO
CR201	SR2873	70402873	SR-2873 2KV,250MA SIL DIO
R200	100W1	70210003	100-1W--5%--MO-T&R
R201	100W1	70210003	100-1W--5%--MO-T&R
R202	2.2K	70240020	2200-1/4W-5%--CF-T&R
R203	100W5	70250006	100-5W--10%-WW-AXL
R204	2.2K	70240020	2200-1/4W-5%--CF-T&R
R205	100W5	70250006	100-5W--10%-WW-AXL
R206	2.2K	70240020	2200-1/4W-5%--CF-T&R
R207	100W5	70250006	100-5W--10%-WW-AXL
R208	2.2K	70240020	2200-1/4W-5%--CF-T&R
R209	100W5	70250006	100-5W--10%-WW-AXL
R210	400W10FP	70250019	400-10W-10%-FP-AXL
V5	6L6GC	70806604	6L6 GC TUBE
V6	6L6GC	70806604	6L6 GC TUBE
V7	6L6GC	70806604	6L6 GC TUBE
V8	6L6GC	70806604	6L6 GC TUBE