LAST DESIGNATOR USED: R104 C64 CR22 J75 S6 K5 V4 Q12

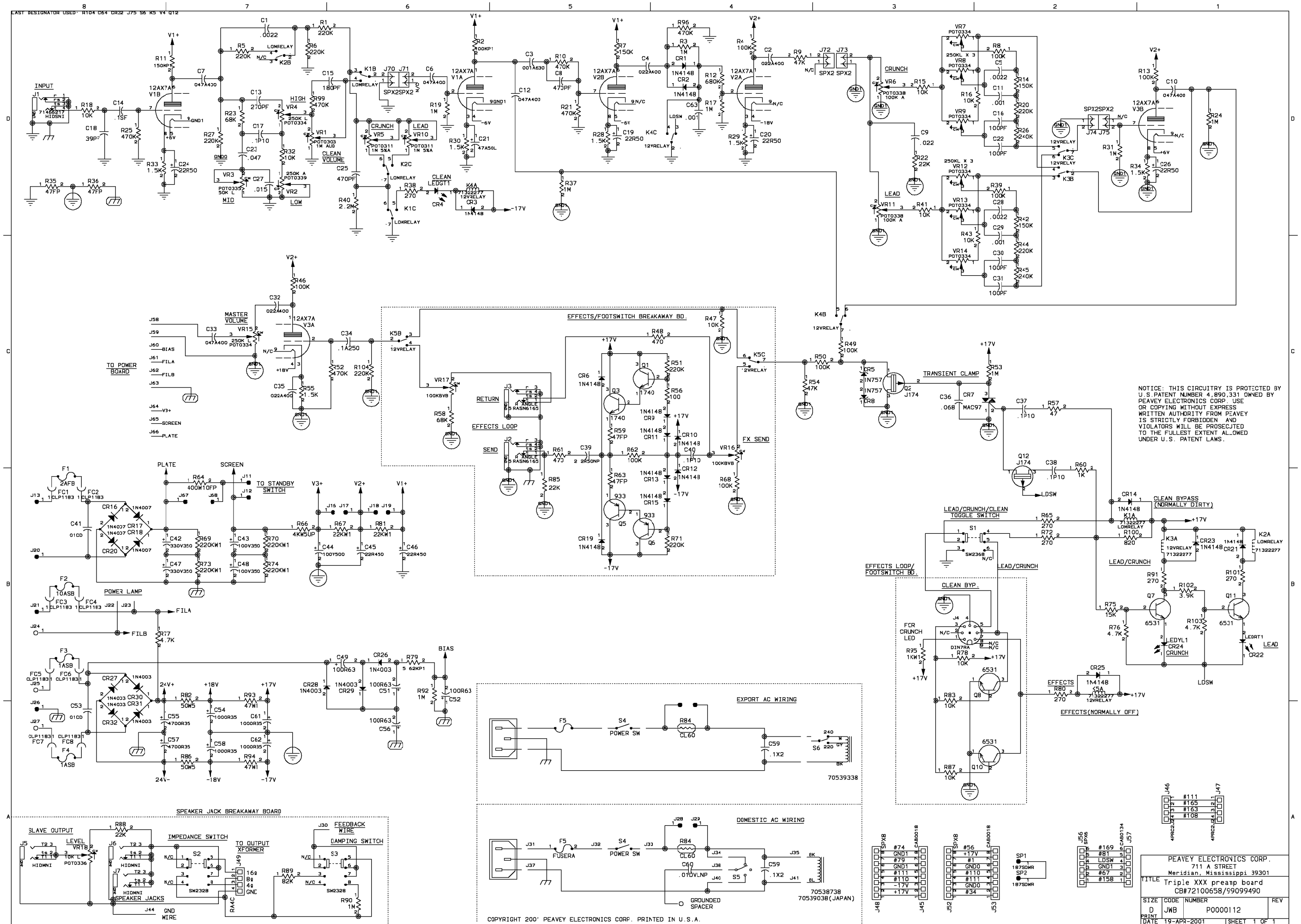

NOTICE: THIS CIRCUITRY IS PROTECTED BY U.S.PATENT NUMBER 4,890,331 OWNED BY PEAVEY ELECTRONICS CORP. USE OR COPYING WITHOUT EXPRESS WRITTEN AUTHORITY FROM PEAVEY IS STRICTLY FORBIDDEN AND VIOLATORS WILL BE PROSECUTED TO THE FULLEST EXTENT ALLOWED UNDER U.S. PATENT LAWS.

COPYRIGHT 200' PEAVEY ELECTRONICS CORP. PRINTED IN U.S.A.

PEAVEY ELECTRONICS CORP.
711 A STREET
Meridian, Mississippi 39301

TITLE Triple XXX preamp board
CB#72100658/59099490

SIZE	CODE	NUMBER	REV
D	JWB	P0000112	

PRINT
DATE 19-APR-2001 SHEET 1 OF 1

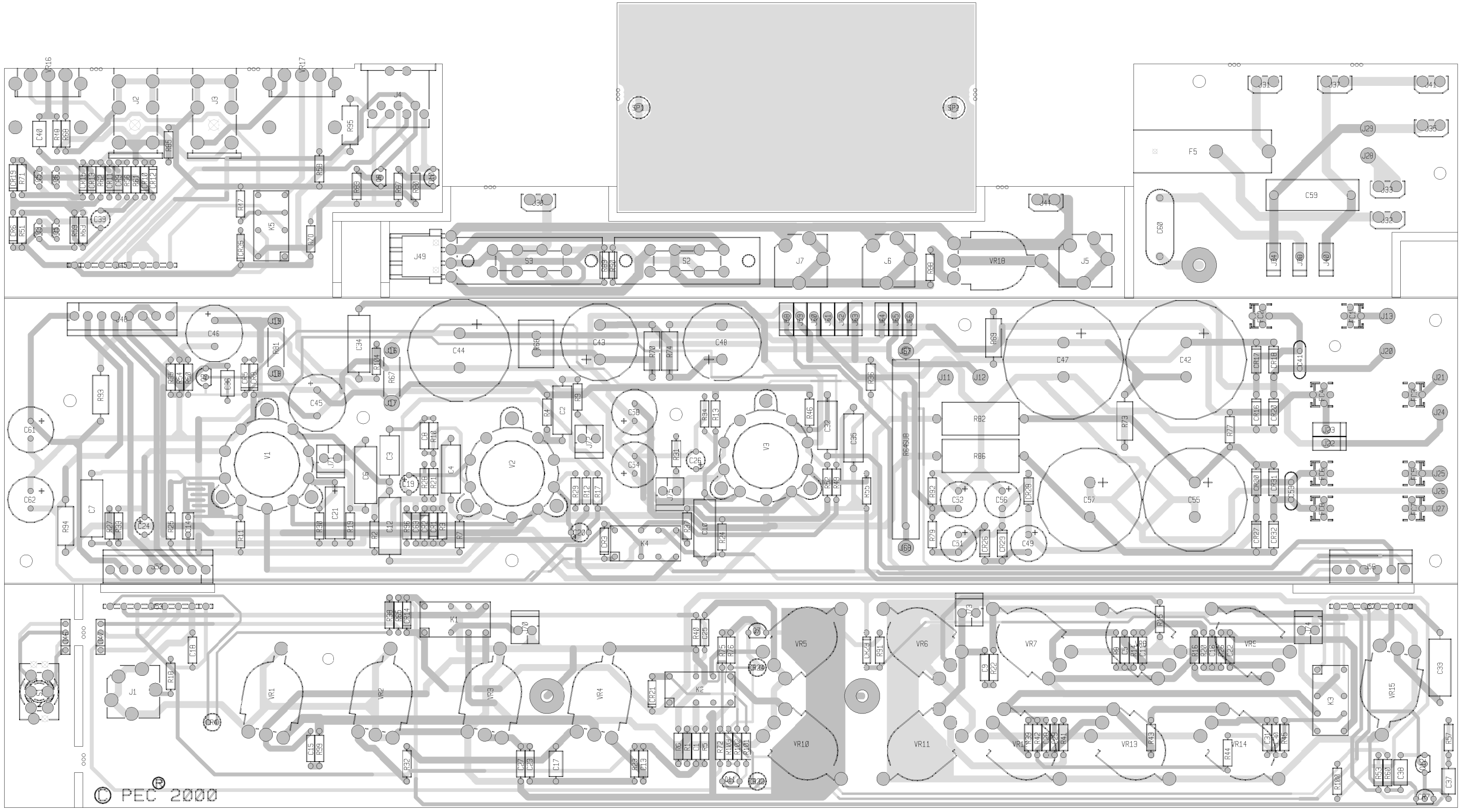

TRIPLE X PREAMP

B I L L O F M A T E R I A L S R E P O R T

BOARD NAME: TRIPLE X PRE
REPORT DATE: 12MAR01
ASSEMBLY LEVEL NUMBER: 99099490 DESIGNER: JAMES MCFERRIN/GARY GOODIN
PROJECT NUMBER: P0000112

QTY.	NAME	VALUE	CBDS PART NUMBER	PART DESCRIPTION	DEVICE DESIGNATIONS
1	72100658	72100658	72100658	PCB	
3	.001	.001	70340000	.001MF----10%----50VDC----MON----T&R	C11, C29, C63
1	.001A630	.001A630	70320281	.001MF--630V--T&R--CAP	C3
3	.0022	.0022	70340004	.0022MF---10%---50VDC----T/C----T&R	C1, C5, C28
1	.015	.015	70340010	.015MF----10%----50VDC----T/C----T&R	C27
2	.01CD	.01CD	70320248	.01MF----20%---1000VDC---CD--T&A	C41, C53
1	.01DVLNP	.01DVLNP	70320104	.01 MFD 125VDC DVL MYLAR +0-20%	C60
1	.022	.022	70340012	.022MF----10%----50VDC----MON----T&R	C9
4	.022A400	.022A400	70320283	.022MF--400V--T&R--CAP	C2, C4, C32, C35
1	.047	.047	70340017	.047MF----10%----50VDC----MON----T&R	C23
5	.047A400	.047A400	70320105	.047MFD 450 VOLT T&R CAP	C6, C7, C10, C12, C33
1	.068	.068	70340018	.068MF----10%----50VDC----MON----T&R	C36
1	.1A250	.1A250	70320334	.1MFD 250 VOLT T&R CAP	C34
4	.1P10	.1P10	70340101	.1MF------10%----50VDC----MON----T&R	C17, C37, C38, C40
1	.1SF	.1SF	70230113	0.10 MFD 10% 100V STCK FILM T&A	C14
1	.1X2	70320298	70320298	.1MF 250VAC X2 20%	C59
1	.47A50L	.47A50L	70340063	.47MFD 50V LOW LEAKAGE	C21
6	1.5K	1.5K	70240018	1.5K--1/4W--5%----CF--T&R	R28, R29, R30, R33, R34, R55
1	100	100	70240010	100---1/4W--5%----CF--T&R	R56
4	1000R35	1000R35	70320186	1000MF----20%----35VDC--EL--T&A	C54, C58, C61, C62
9	100K	100K	70240034	100K--1/4W--5%----CF--T&R	R4, R8, R13, R39, R46, R49, R50, R62, R68
2	100KBVB	71190517	71190517	100K LIN MIN VPC W/BRACKET	VR16, VR17
1	100KP1	100KP1	70240151	100K--1/4W--1%----MF--T&R	R2
4	100PF	100PF	70340054	100PF-----10%----50VDC----T/C----T&R	C16, C22, C30, C31
4	100R63	100R63	70320264	100MF-----20%----63VDC---EL--T&A	C49, C51, C52, C56
2	100V350	100V350	70320130	100 MFD 350VDC RADIAL SNAP-IN	C43, C48
1	100V500	100V500	70320337	100MFD - +/-20% - 500VDC - EL - R/S	C44
10	10K	10K	70240025	10K---1/4W--5%----CF--T&R	R15, R16, R18, R32, R41, R43, R47, R78, R83, R87
3	12AX7A	12AX7A	70806612	12AX7 VACUUM TUBE W/7089/6614 BOT ENTRY SKT	V1, V2, V3
3	12VRELAY	71322277	71322277	DPDT OMRON RELAY 12VDC	K3, K4, K5
3	150K	150K	70240035	150K--1/4W--5%----CF--T&R	R7, R14, R42
1	150KP1	150KP1	70241035	150K--1/4W--1%----MF--T&R	R11
1	15K	15K	70240027	15K---1/4W--5%----CF--T&R	R75
2	1740	1740	70401740	2SC1740SLN 40V,.1A, NPN, LOW NOISE T&A	Q1, Q3
1	180PF	180PF	70340056	180PF-----10%----50VDC----T/C----T&R	C15
2	187SOWR	70901854	70901854	SPCR,R,T4-403X/16,SW,AL,S	SP1, SP2
1	1K	1K	70240017	1K----1/4W--5%----CF--T&R	R60
1	1KW1	1KW1	70210000	1K----1W----5%----MO--T&R	R95
9	1M	1M	70240039	1M----1/4W--5%----CF--T&R	R3, R17, R19, R24, R31, R37, R53, R90, R92
7	1N4003	1N4003	70464003	1N4003 200V SILICON DIODE	CR26, CR27, CR28, CR29, CR30, CR31, CR32
4	1N4007	1N4007	70464007	1N4007 1KV, 1A, SILICON DIODE	CR16, CR17, CR18, CR20
15	1N4148	4148	70464148	1N4148 75V 10MA SILICON DIODE	CR1, CR2, CR3, CR6, CR9, CR10, CR11, CR12, CR13, CR14, CR15, CR19, CR21, CR23, CR25
2	1N757	1N757	70400757	1N757A 9.1V 5% ZENER DIODE	CR5, CR8
1	2.2M	2.2M	70240040	2.2M--1/4W--5%----CF--T&R	R40
1	2.2R50NP	2.2R50NP	70320184	2.2MF-----20%----50VDC---NP--T&A	C39
9	220K	220K	70240036	220K--1/4W--5%----CF--T&R	R1, R5, R6, R20, R27, R44, R51, R71, R104
4	220KW1	220KW1	70210008	220K--1W----5%----MO--T&R	R69, R70, R73, R74
3	22K	22K	70240029	22K---1/4W--5%----CF--T&R	R22, R85, R88

2 22KW1 22KW1 70210005 22K---1W----5%----MO--T&R

R67, R81

2 22R450 22R450 70320339 22R450---20%---450VDC--POL--R/W

C45, C46

4 22R50 22R50 70320181 22MF-----20%----50VDC---EL--T&A

C19, C20, C24, C26

2 240K 240K 70241094 240K--1/4W--5%----CF--T&R

R26, R45

6 270 270 70240013 270---1/4W--5%----CF--T&R

R38, R65, R72, R80, R91, R101

1 270PF 270PF 70340057 270PF-----10%----50VDC----T/C----T&R

C13

1 3.9K 3.9K 70241093 3.9K--1/4W--5%----CF--AXL

R102

2 330V350 330V350 70320169 330 MFD 350 VDC VERT. SNAP-IN

C42, C47

1 39PF 39PF 70340052 39PF----------50VDC----T/C----T&R

C18

3 4.7K 4.7K 70240023 4.7K--1/4W--5%----CF--T&R

R76, R77, R103

1 400W10FP 400W10FP 70250019 400--10W--10%--FP--AXL

R64

1 47 47 70240008 47----1/4W--5%----CF--T&R

R57

2 470 470 70240015 470---1/4W--5%----CF--T&R

R48, R61

2 4700R35 4700R35 70350200 4700 MFD 35VDC RADIAL SNAP-IN

C55, C57

6 470K 470K 70240038 470K--1/4W--5%----CF--T&R

R10, R21, R25, R52, R96, R99

2 470PF 470PF 70340058 470PF-----10%----50VDC----T/C----T&R

C8, C25

4 47FP 47FP 70240090 47FP--1/4W--5%----FP--T&R

R35, R36, R59, R63

2 47K 47K 70240031 47K---1/4W--5%----CF--T&R

R9, R54

2 47W1 47W1 70210011 47----1W----5%----MO--T&R

R93, R94

1 4KW5UP 4KW5 70250181 4K--5W--10%--WW--STANDUP PART

R66

2 4PRC2J2 70600024 70600024 4 CKT 2.25" JUMPER .100 CNTR, (2 GATE)

J46, J47

1 5.62KP1 5.62KP1 70241008 5.62K-1/4W--1%----MF--T&R

R79

2 50W5 50W5 70250001 50--5W--10%--WW--AXL

R82, R86

4 6531 6531 70466531 MPS-6531 TO92 NPN TRANS. T&A

Q7, Q8, Q10, Q11

1 680K 680K 70240065 680K----1/4W--5%----CF--T&R

R12

2 68K 68K 70240032 68K---1/4W--5%---CF--T&R

R23, R58

1 75W10 75W10 70250048 75--10W--10%--WW--AXL

SUB

1 820 820 70240019 820---1/4W--5%---CF--T&R

R100

1 82K 82K 70240033 82K---1/4W--5%---CF--T&R

R89

2 933 933 70400933 2SA933ASLN 40V, .1A, PNP, LOW NOISE T&A

Q5, Q6

2 CAB0018 70600018 70600018 8C .156 - 5" JMPR W/FEED-TO CONN.

J45, J53

1 CAB0134 70600134 70600134 6C PRE-TINNED.156" 5" JMPR W/ F-CONN

J57

8 CLP1183 CLP1183 70901183 FUSECLIP, FC MT - T&A

FC1, FC2, FC3, FC4, FC5, FC6, FC7, FC8

1 DIN7RA 71466226 71466226 CONN 7P R/A PCMNT DIN W/ 4 MNT. HOLES

J4

3 FMPU 73711811 73711811 M118-171 C.E. FEMALE MOLEX PIN

J24, J25, J27

1 FUSERA 70901429 70901429 EXT. FUSEHOLDER, PC MT

F5

3 HIDMNI 71466214 71466214 2 TIP HID JACK NINS W/SPD

J5, J6, J7

1 HIDSNI 71466217 71466217 STEREO HID JACK NINS W/SPD

J1

2 J174 J174 70460174 J-174 30V TO-92 P-CHAN FET T&A

Q2, Q12

1 LEDGT1 LEDGT1 70450035 HLMP 1790 GREEN LED T-1

CR4

1 LEDRT1 LEDRT1 70450034 SLR34VR3 GP RED LED T1 ROUND

CR22

1 LEDYL1 LEDYL1 70450036 LED YELLOW T1 (SM RND) VERT.

CR24

2 LOMRELAY 71322378 71322378 RELAY, 12V DPDT - LO MIC

K1, K2

1 MAC97 MAC97 70460097 MAC97-6 400V .6A TO-92 TRIAC T&A

CR7

14 MMPU 73711812 73711812 R93-12 PN C.B. MALE MOLEX PIN

J11, J12, J13, J16, J17, J18, J19, J20,
J21, J26, J28, J29, J67, J68

1 POT0303 71190303 71190303 1 MEG AUD 20% MET. SPIDER 1MM

VR1

2 POT0311 71190311 71190311 1 MEG A METRIC SPDR 1MM

VR5, VR10

8 POT0334 71190334 71190334 250K LIN METRIC SPIDER 1MM

VR4, VR7, VR8, VR9, VR12, VR13, VR14,
VR15

1 POT0335 71190335 71190335 50K LIN METRIC SPIDER 1MM

VR3

1 POT0336 71190336 71190336 10K LIN METRIC SPIDER 1MM

VR18

2 POT0338 71190338 71190338 100K AUD 20% METRIC SPIDER 1MM

VR6, VR11

1 POT0339 71190339 71190339 250K AUD 20% METRIC SPIDER 1MM

VR2

1 RA4C RA4C 73719109 4 PIN R/A HEADER .156 W/FRICTION LOCK

J49

2 RASN6165 71466165 71466165 JK R/A 12.5MM NIN STEREO -88

J2, J3

8 SPD 73716194 73716194 .250 PC MNT SPADE .093 PCB

J30, J31, J32, J33, J35, J37, J41, J44

12 SPX1 SPX1 73717003 1 STAKE PIN

J34, J38, J40, J58, J59, J60, J61, J62,
J63, J64, J65, J66

2 SPX1U SPX1U 73717003 1 STAKE PIN

J22, J23

6 SPX2 SPX2 XXXXXXXX 2 EACH OF STAKE PINS

J70, J71, J72, J73, J74, J75

1 SPX6 SPX6 XXXXXXXX 6 EACH OF STAKE PINS

J56

2 SPX8 SPX8 XXXXXXXX 8 EACH OF STAKE PINS

J48, J52

2 SW2328 SW2328 71322328 2PTT PC MOUNT SLIDE SWITCH

S2, S3

1 SW2368 71322368 71322368 SPDT TOGGLE SWITCH

S1

** END OF BILL OF MATERIALS REPORT **

****

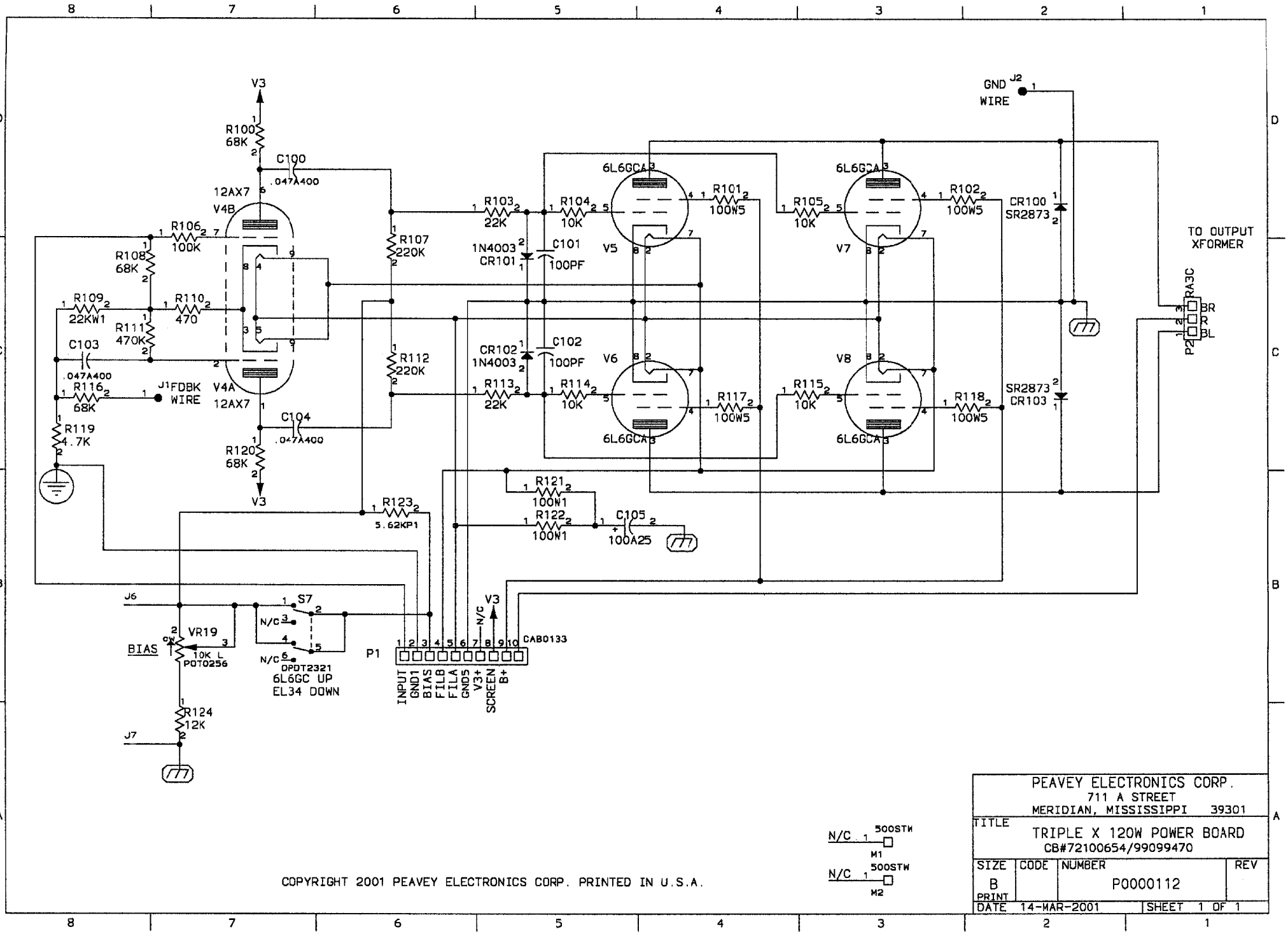

COPYRIGHT 2001 PEAVEY ELECTRONICS CORP. PRINTED IN U.S.A.

PEAVEY ELECTRONICS CORP.
711 A STREET
MERIDIAN, MISSISSIPPI 39301

TITLE
TRIPLE X 120W POWER BOARD
CB#72100654/99099470

SIZE	CODE	NUMBER	REV
B PRINT		P0000112	
DATE 14-MAR-2001		SHEET 1 OF 1	

TRIPLE XXX 112/212/POWER

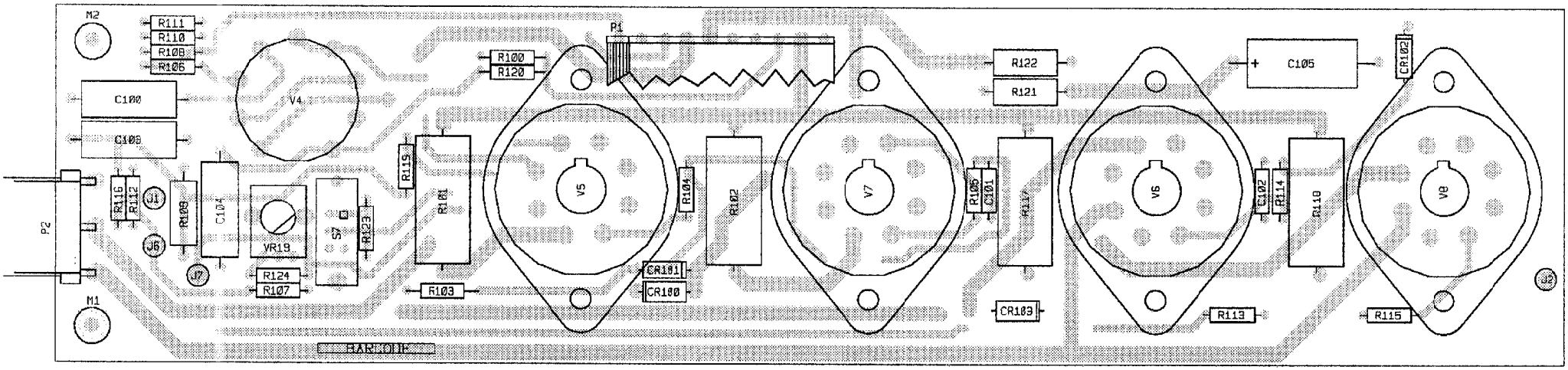

FOR TRIPLE XXX 112 60W DO NOT INSERT V5, V8, R101, R118

B I L L O F M A T E R I A L S R E P O R T

BOARD NAME: XXXPWR REPORT DATE: 19NOV02
ASSEMBLY LEVEL NUMBER: 99099471 DESIGNER: ELBERT COLEMAN
PROJECT NUMBER: P0000112
CBDS

** QTY.	PART NAME	PART VALUE	PART NUMBER	DESCRIPTION AND DEVICE DESIGNATIONS **********
1	72100654	72100654	72100654	PCB
3	.047A400	.047A400	70320105	.047MFD 450 VOLT T&R CAP C100, C103, C104
1	100A25	100A25	70320014	100 MFD 25VDC LYTIC CAP C105
1	100K	100K	70240034	100K--1/4W--5%----CF--T&R R106
2	100PF	100PF	70340054	100PF-----10%----50VDC----T/C----T&R C101, C102
2	100W1	100W1	70210003	100---1W----5%----MO--T&R R121, R122
2	100W5	100W5	70250006	100--5W--10%--WW--AXL R102, R117
4	10K	10K	70240025	10K---1/4W--5%----CF--T&R R104, R105, R114, R115
1	12AX7	12AX7	70806612	12AX7 VACUUM TUBE W/9 PIN PC MNT SOCKET V4
1	12K	12K	70240057	12K---1/4W--5%----CF--T&R R124
2	1N4003	1N4003	70464003	1N4003 200V SILICON DIODE CR101, CR102
2	220K	220K	70240036	220K--1/4W--5%----CF--T&R R107, R112
2	22K	22K	70240029	22K---1/4W--5%----CF--T&R R103, R113
1	22KW1	22KW1	70210005	22K---1W----5%----MO--T&R R109
1	4.7K	4.7K	70240023	4.7K--1/4W--5%----CF--T&R R119

1 470 470 70240015 470---1/4W--5%----CF--T&R

R110

1 470K 470K 70240038 470K--1/4W--5%----CF--T&R

R111

1 5.62KP1 5.62KP1 70241008 5.62K-1/4W--1%----MF--T&R

R123

2 500STW 70901859 70901859 SPCR,R,TA-40X1/2,SW,AL,ST

M1, M2

4 68K 68K 70240032 68K---1/4W--5%----CF--T&R

R100, R108, R116, R120

2 6L6GCA 6L6GCA 70806604 6L6GC VAC TUBE W/INS SOCKET 70806627

V6, V7

1 CAB0133 70600133 70600133 10C PRE-TIN .156 - 5" CONN.

P1

1 DPDT2321 DPDT2321 71322321 SWITCH, DPDT PCMNT SLIDE

S7

1 POT0256 71190256 71190256 10KB 9MM VPC S/K

VR19

1 RA3C RA3C 73719110 3 PIN R/A HEADER .312 W/FRICTION LOCK

P2

2 SR2873 SR2873 70402873 SR2873 2KV, 250MA SILICON DIODE

CR100, CR103

1 WJ8BK3SR WJ8BK3SR 91090520 BK--18G--3"CPT/250 RA SPD

J2

1 WJ8BK5SP WJ8BK5SP 91090506 BK-18G-5"-CPT-250SPD/RA

J1

1 WJ8BK6FM WJ8BK6FM 91103769 BLACK 6" 18GA CPT W/FEMALE CONTACT PIN

J6

1 WJ8RD6FM WJ8RD6FM 91103768 RED 6" 18GA CPT W/FEMALE CONTACT PIN

J7

****
* END OF BILL OF MATERIALS REPORT *
****