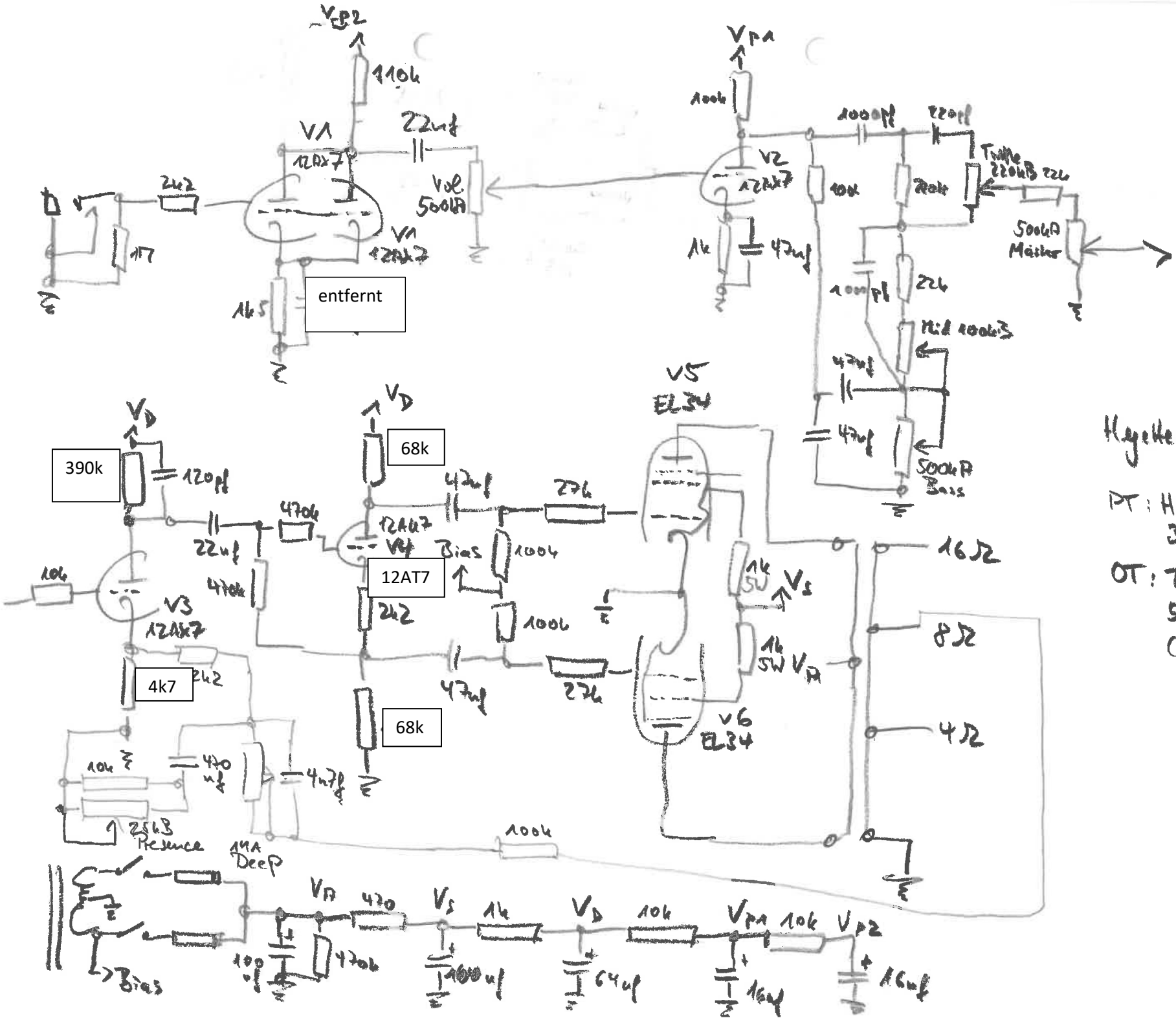

Hegette 40 Blues

PT: Hammond
372JX

OT: Tube Town
50W Marshall
(Pri 3800)