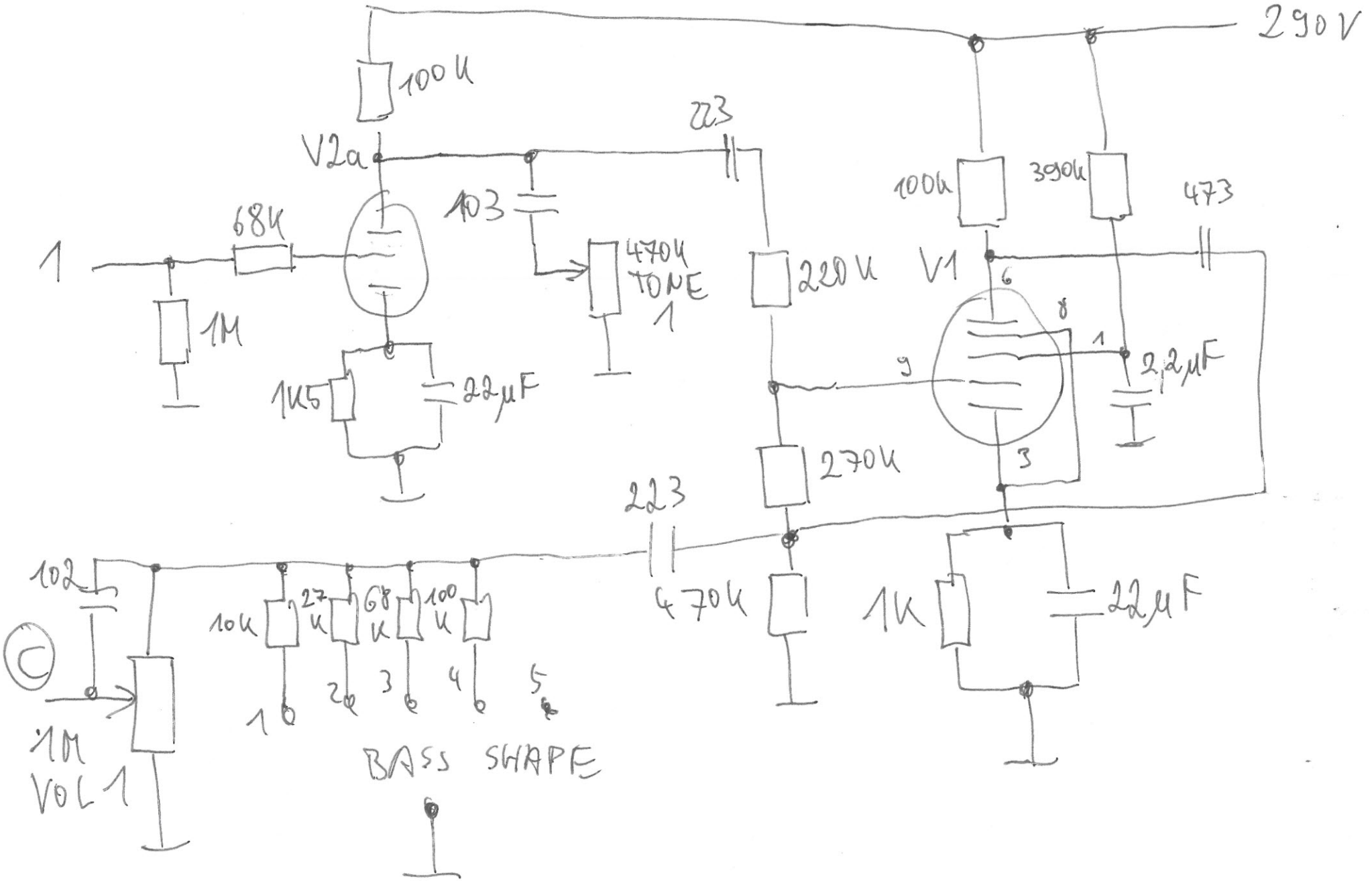
290V
100k
V2a
223
103
68k
1
1M
470k
TONE
1
220k
100k
390k
473
V1
6
8
1
9
2,2µF
1k5
22µF
270k
3
223
102
10k
27k
68k
100k
470k
1k
22µF
1
2
3
4
5
1M
VOL 1
BASS SHAPE

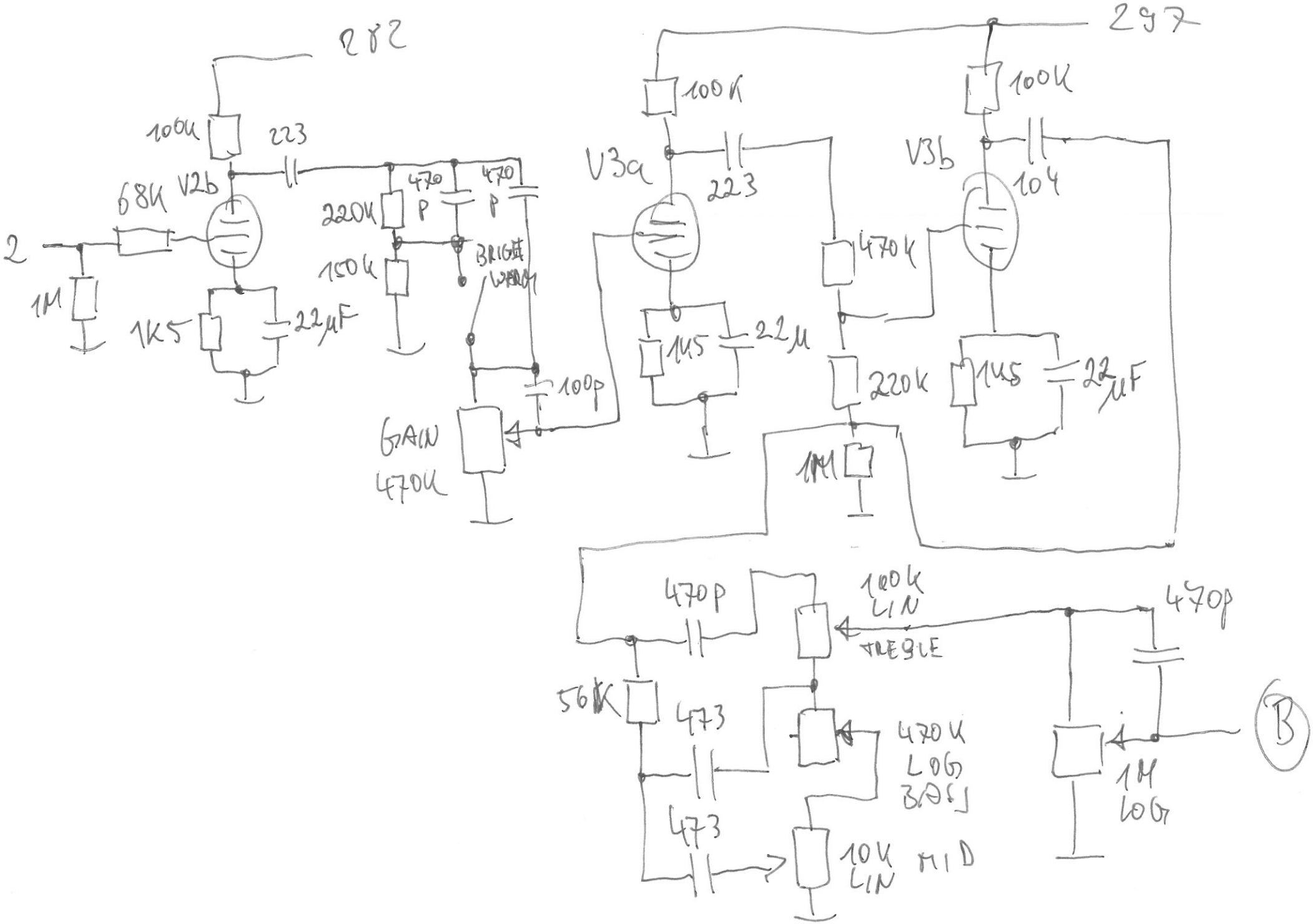

282
297
100K
223
68K
V2b
2
1M
1K5
22µF
220K
470 P
470 P
150K
BRIGHT WARM
100p
GAIN 470K
V3a
100K
223
1K5
22µ
470K
220K
1M
V3b
100K
104
1K5
22µF
470p
100K LIN TREBLE
470p
56K
473
473
470K LOG BASS
10K LIN MID
1M LOG
B

B
C
223
223
47k
470k
470k
820
100k
100k
473
473
470p
220k
328
2M2
220k
10W
30W
NC: 1,6,8
4 X EL84
10k
10k
2
2
3
3
7
4
14
68
470µF
1k
16
8
4
684
AKODE