Learning Campus

FET - Switching

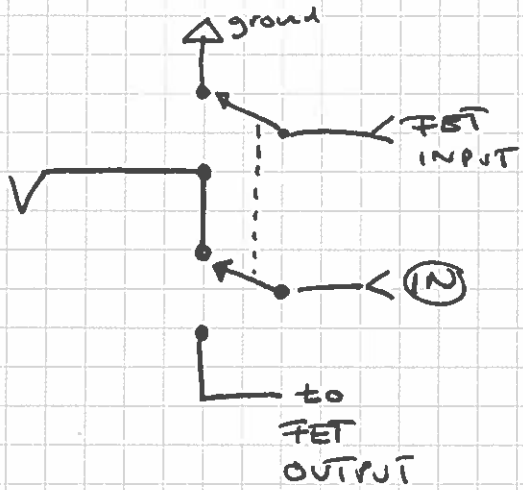

FET:

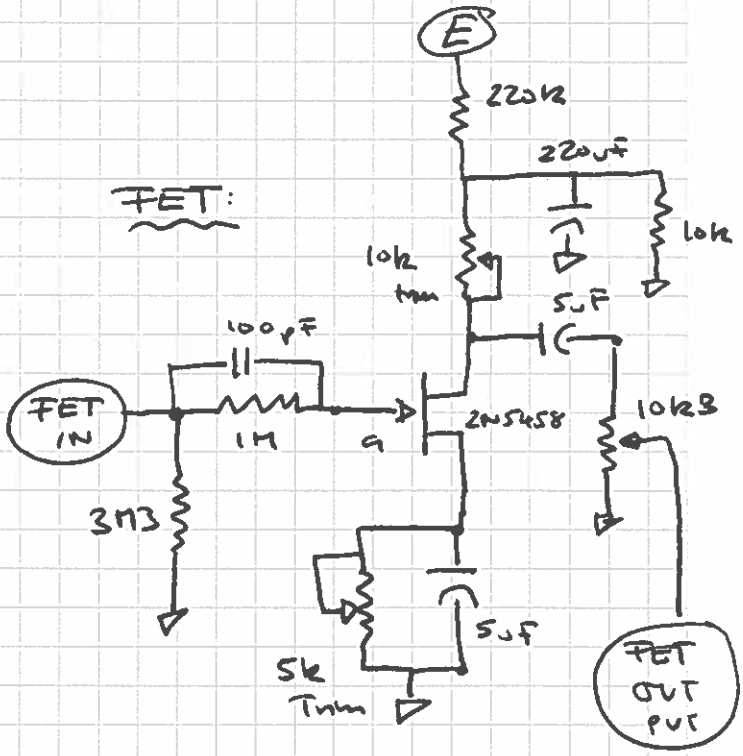

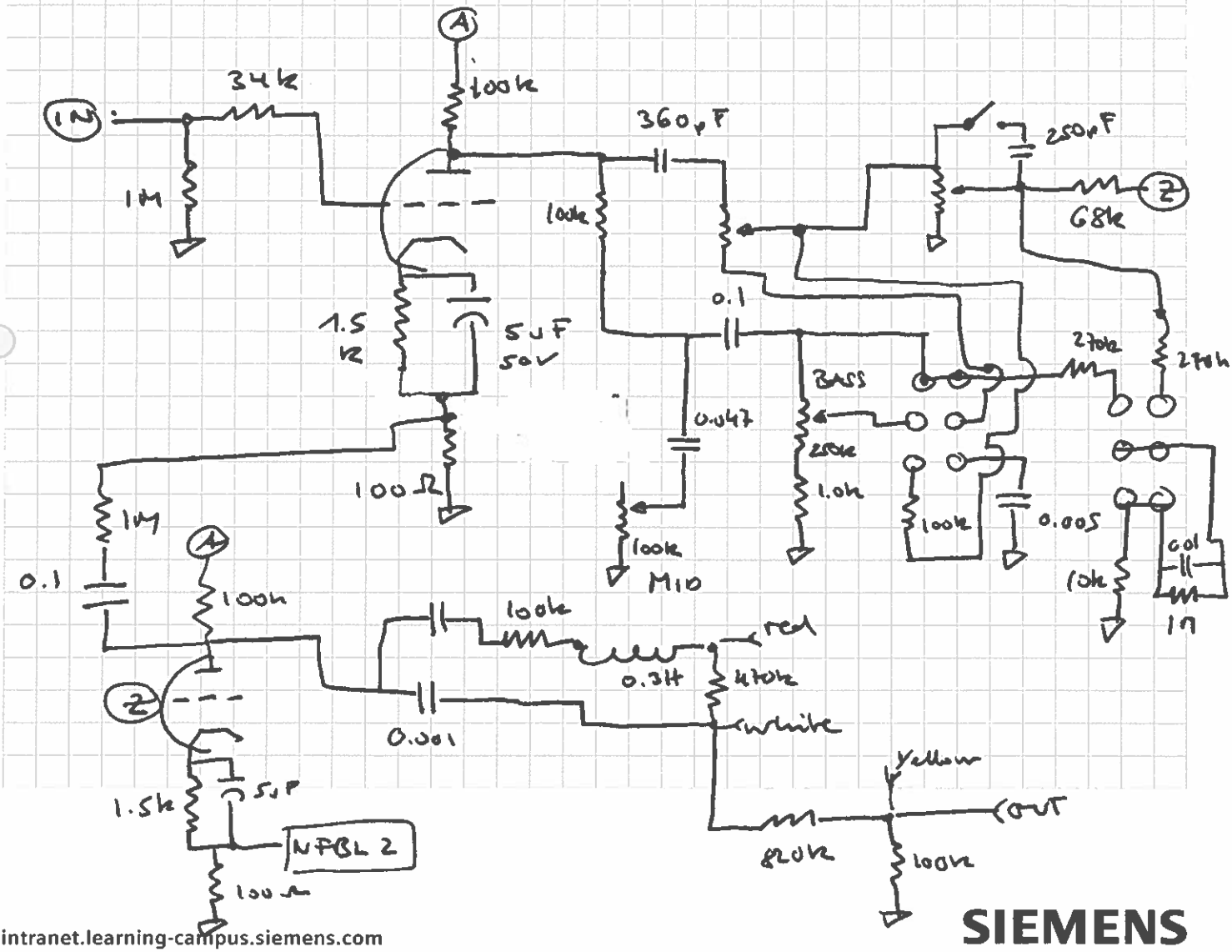

intranet.learning-campus.siemens.com

SIEMENS

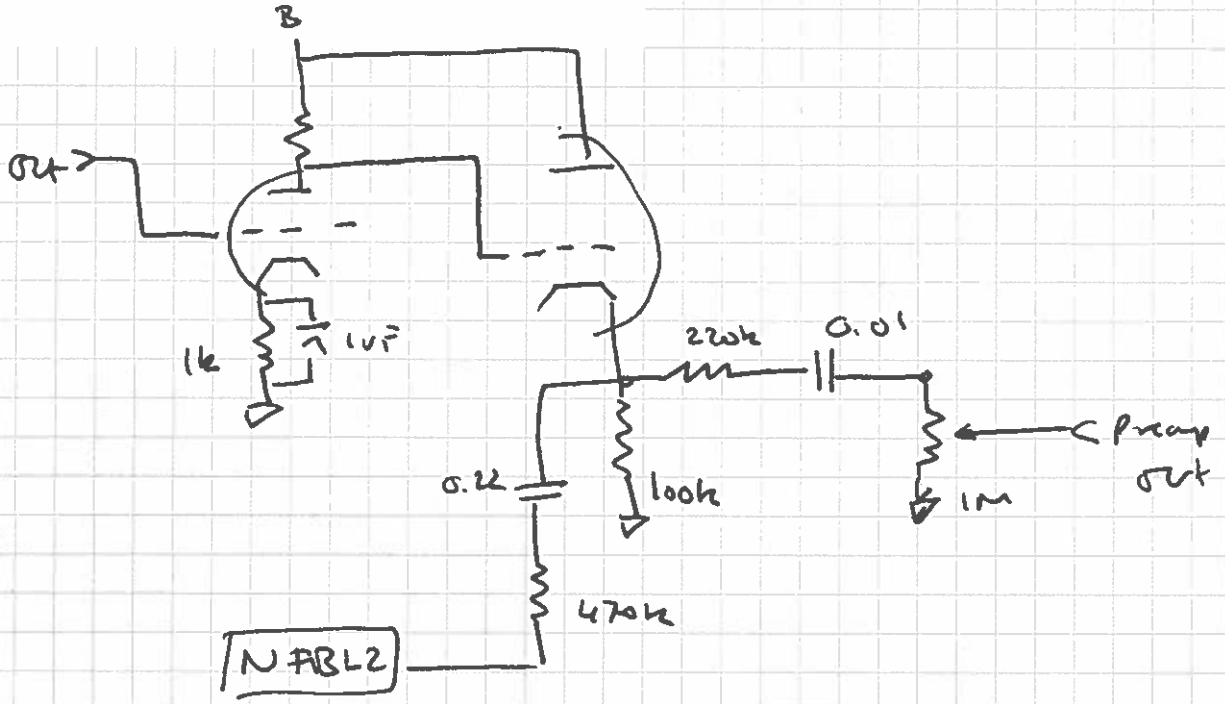

SIEMENS

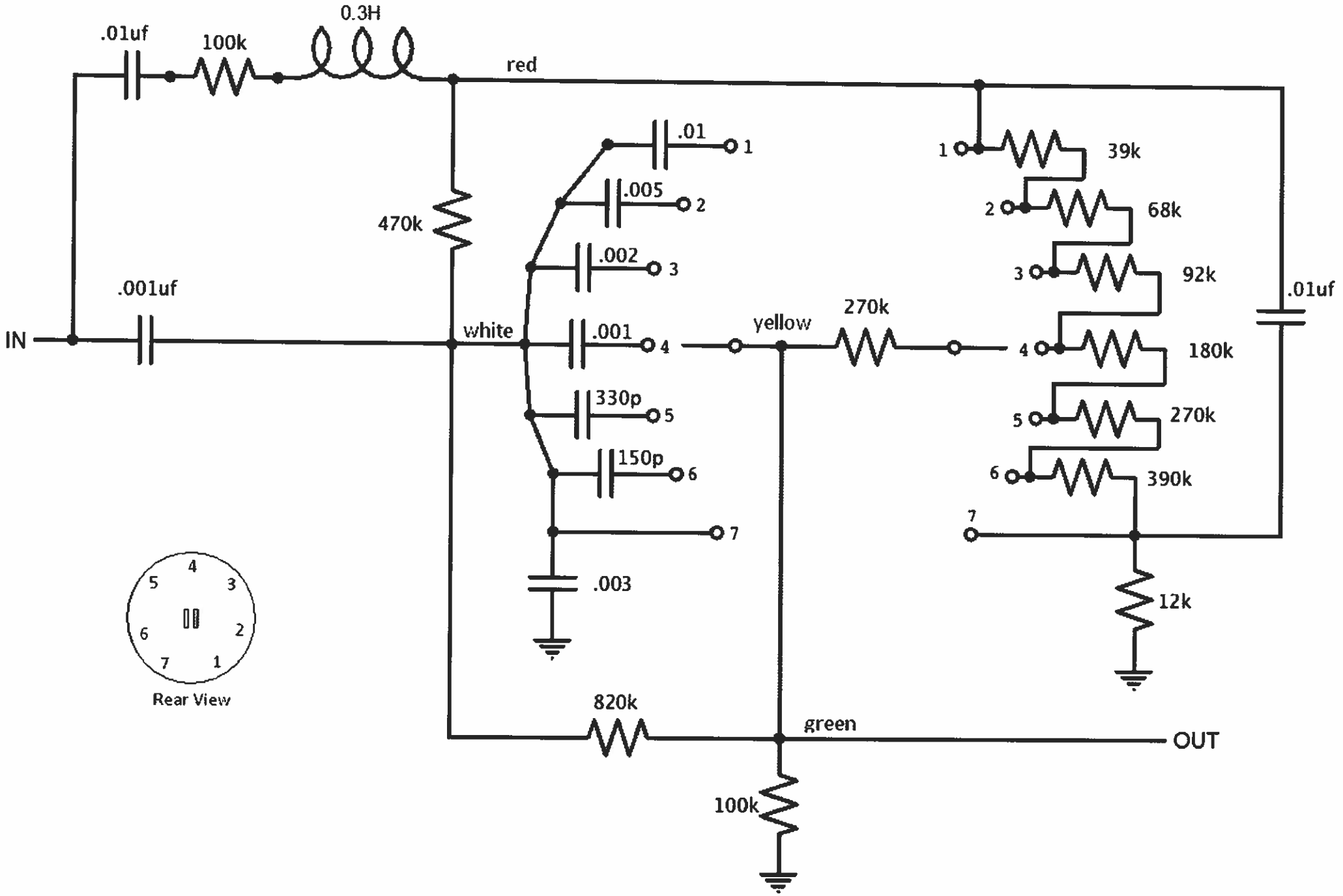
.01uf
100k
0.3H
red
470k
.01
1
.005
2
.002
3
.001
4
330p
5
150p
6
7
.003
.001uf
IN
white
yellow
270k
1
39k
2
68k
3
92k
4
180k
5
270k
6
390k
7
12k
.01uf
820k
green
OUT
100k
4
3
2
1
7
6
5
Rear View