Preamp Croft Micro 25 RS	Preamp w/ ECC99 line stage			
by mad	SIZE	FSCM NO	DWG NO	REV 4B
25.03.2020	SCALE 1:1		SHEET 2 OF 4	

About RIAA (Filter):

Croft's Phono Preamp is being criticized not really matching the RIAA specs. This schematic represents Croft's design.
In the case the sound of the phono in stage should not meet the listener's expection, the filter section could be easily tuned by other values (RC filter network)

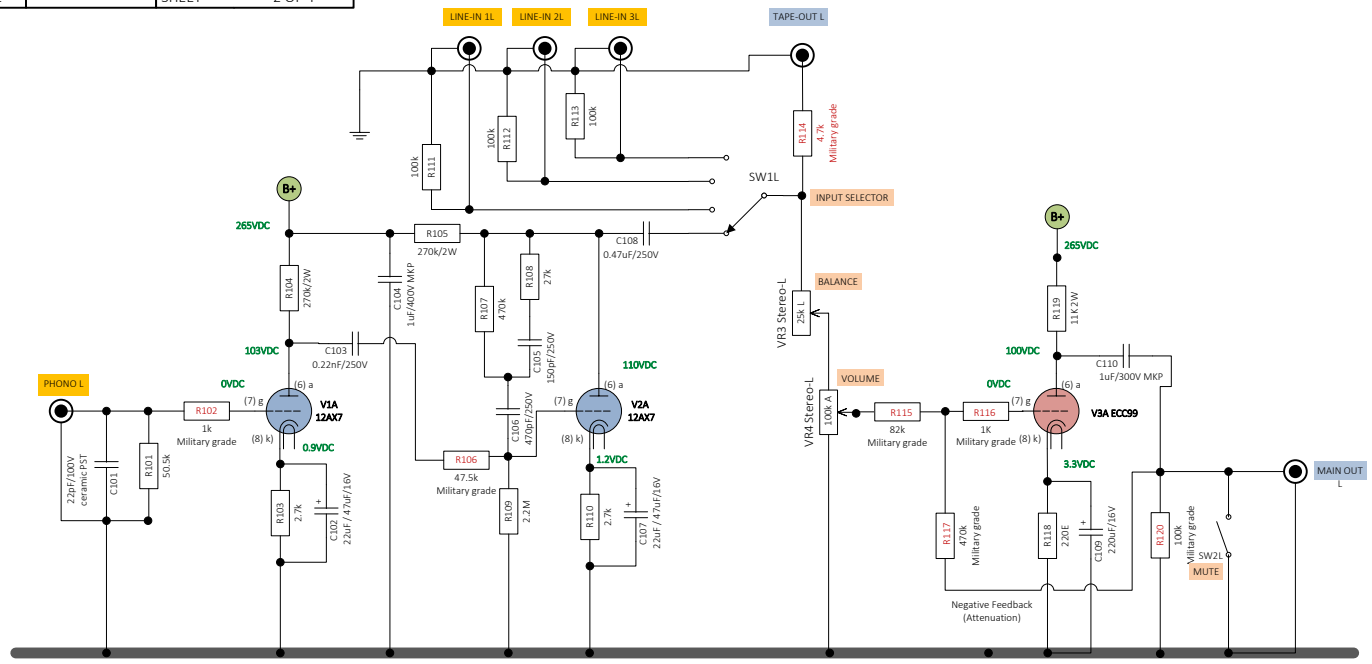

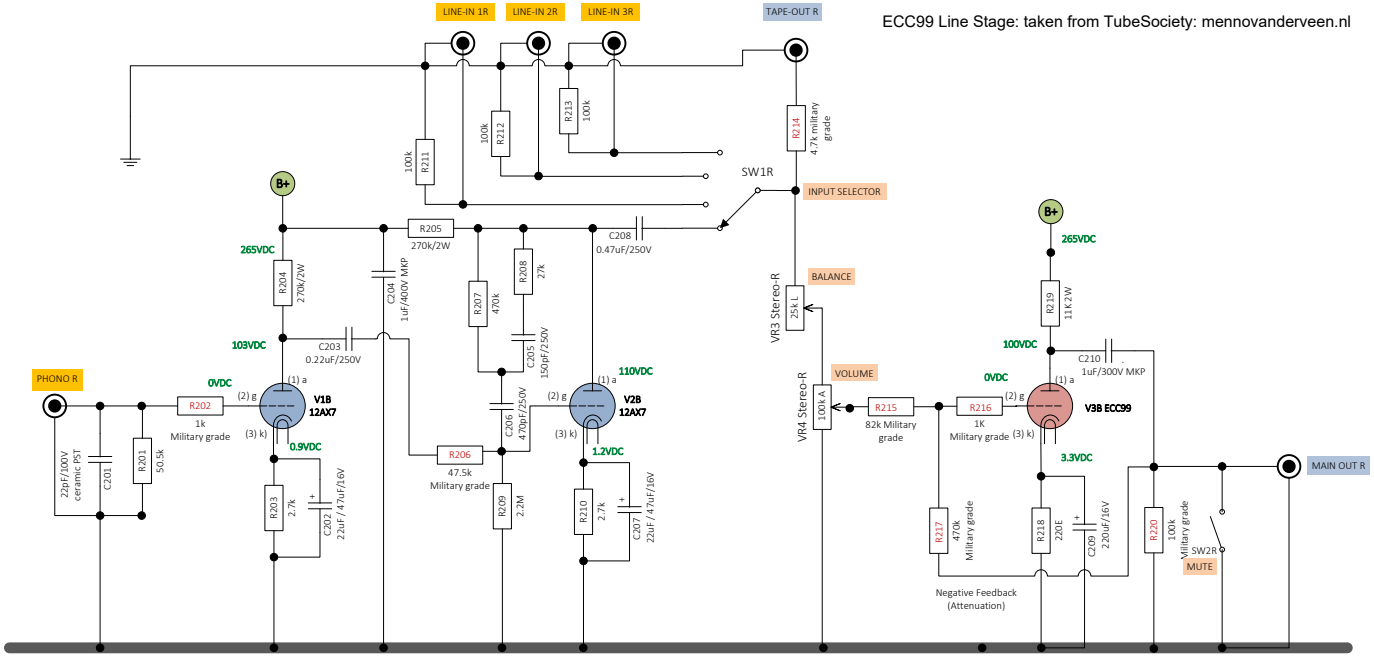

ECC99 Line Stage: taken from TubeSociety: mennovanderveen.nl