Preamp Croft Micro 25 RS				
	Turn-On Delay Circuitry			
by mad	SIZE	FSCM NO	DWG NO	REV 4a
26.03.2020	SCALE 1:1		SHEET 4 OF 4	

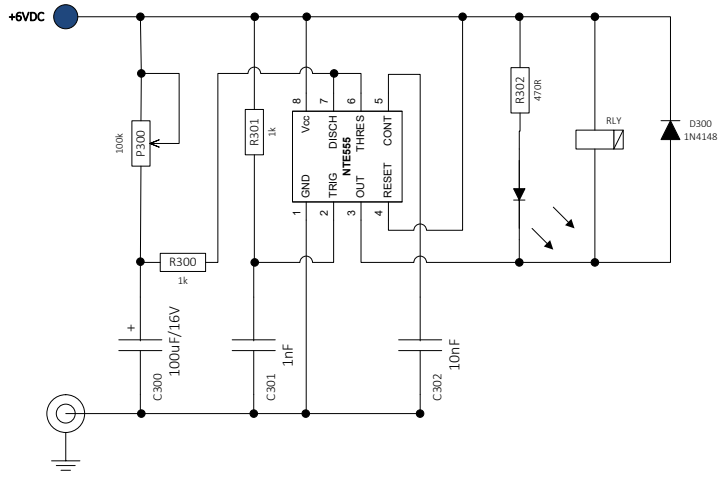

PIN			I/O	DESCRIPTION
NAME	D, P, PS, PW, JG	FK		
	NO.			
CONT	5	12	I/O	Controls comparator thresholds, Outputs 2/3 VCC, allows bypass capacitor connection
DISCH	7	17	O	Open collector output to discharge timing capacitor
GND	1	2	–	Ground
NC		1, 3, 4, 6, 8, 9, 11, 13, 14, 16, 18, 19	–	No internal connection
OUT	3	7	O	High current timer output signal
RESET	4	10	I	Active low reset input forces output and discharge low.
THRES	6	15	I	End of timing input. THRES > CONT sets output low and discharge low
TRIG	2	5	I	Start of timing input. TRIG < ⅓ CONT sets output high and discharge open
V_{CC}	8	20	–	Input supply voltage, 4.5 V to 16 V. (SE555 maximum is 18 V)