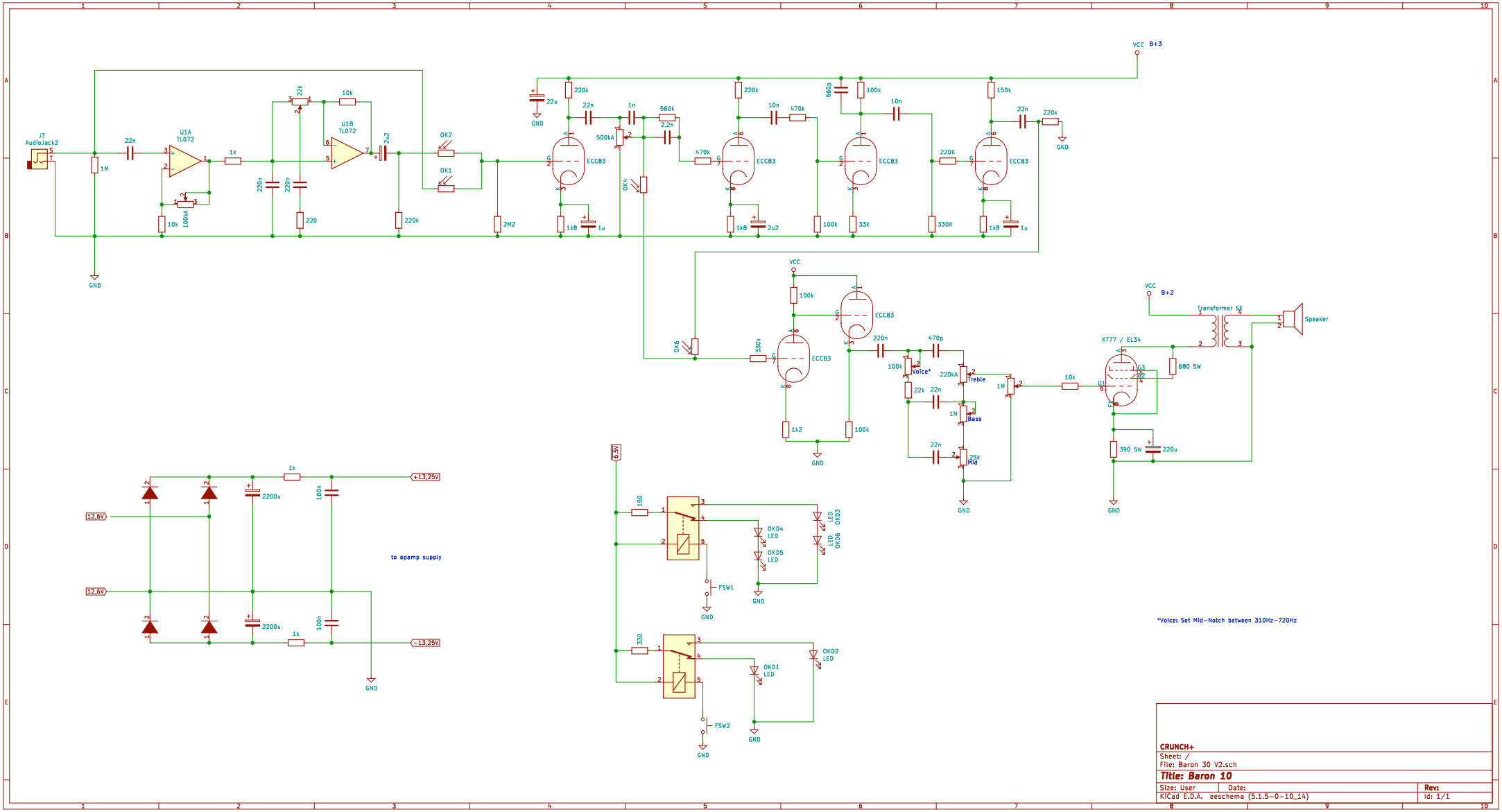

J?
AudioJack2
U1A
TL072
U1B
TL072
ECC83
KT77 / EL34
Transformer SE
Speaker
VCC
B+3
B+2
GND
Voice*
Treble
Bass
Mid
OK1
OK2
OK4
OK6
FSW1
FSW2
OKD1
OKD2
OKD3
OKD4
OKD5
OKD6
LED
+13,25V
-13,25V
12,6V
to opamp supply
*Voice: Set Mid-Notch between 310Hz-720Hz
CRUNCH+
Sheet: /
File: Baron 30 V2.sch
Title: Baron 10
Size: User
Date:
Rev:
KiCad E.D.A. eeschema (5.1.5-0-10_14)
Id: 1/1