BadHotSnake

A BadCat HotCat 30HD Clone
Martin Dohrau, CH-8143 Stallikon
Version 1.3 Freitag, 4. April 2008

Front View Amp

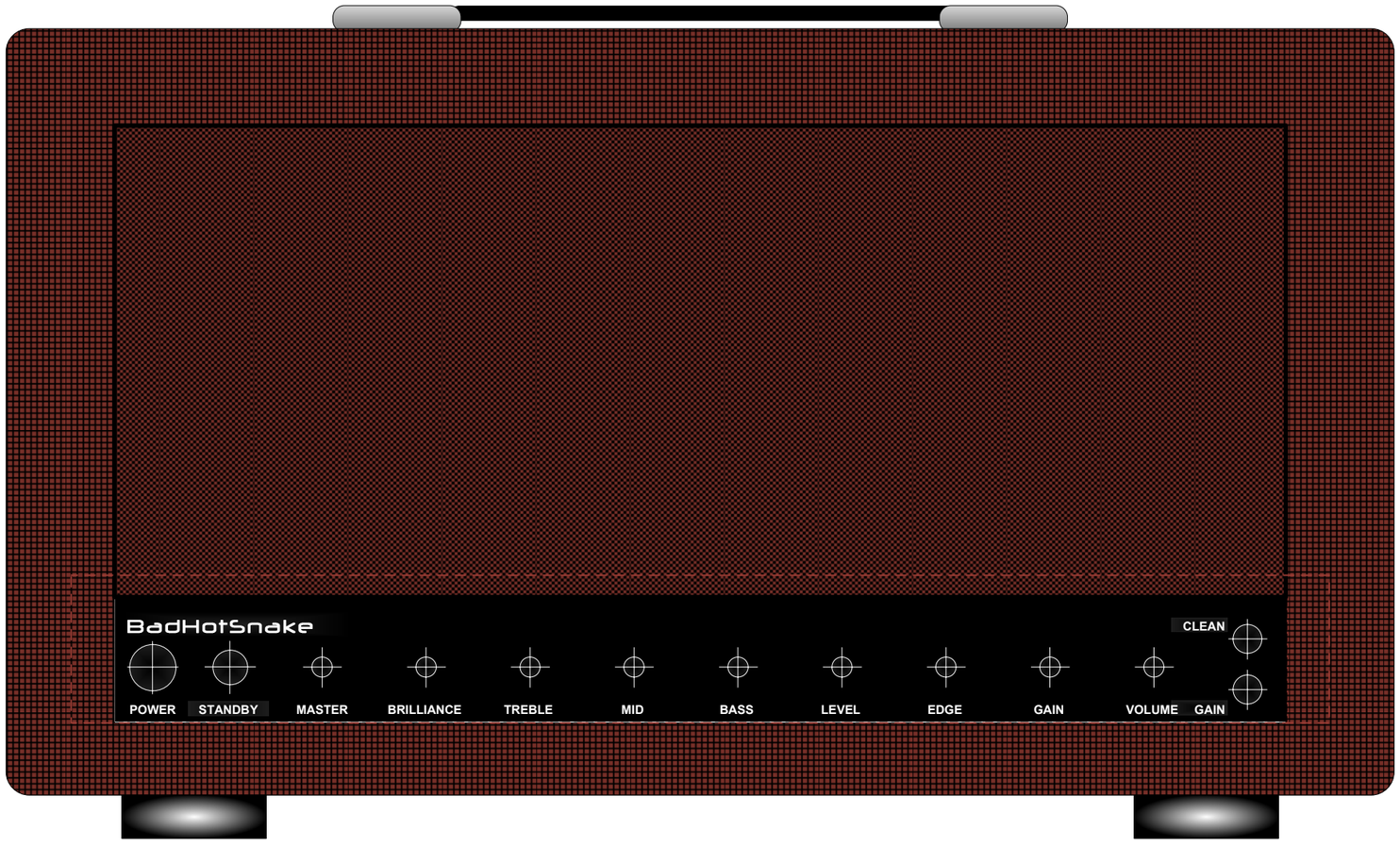

BadHotSnake

A BadCat HotCat 30HD Clone
Martin Dohrau, CH-8143 Stallikon
Version 1.3 Freitag, 4. April 2008

Front Template

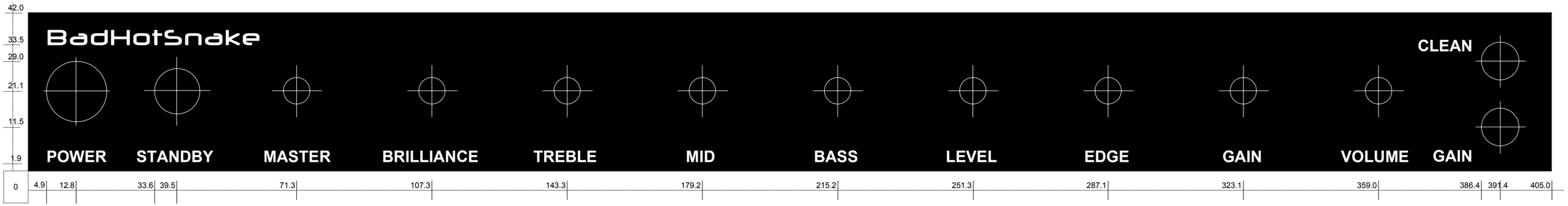

Skalierung:	1:1
Vermassung:	[mm]
Material:	Alu, 1mm schwarz, 42 x 405 mm
Schrift:	weiss
Gravierung:	nach Vorlage

Kontaktinformation:
M. Dohrau, Tel B 044 234 5159

20080316_Badhotsnake_Ver01.3.vsd

BadHotSnake

A BadCat HotCat 30HD Clone

Martin Dohrau, CH-8143 Stallikon

Version 1.3 Freitag, 4. April 2008

Preamp Circuitry (Mr.Class A) - original schema

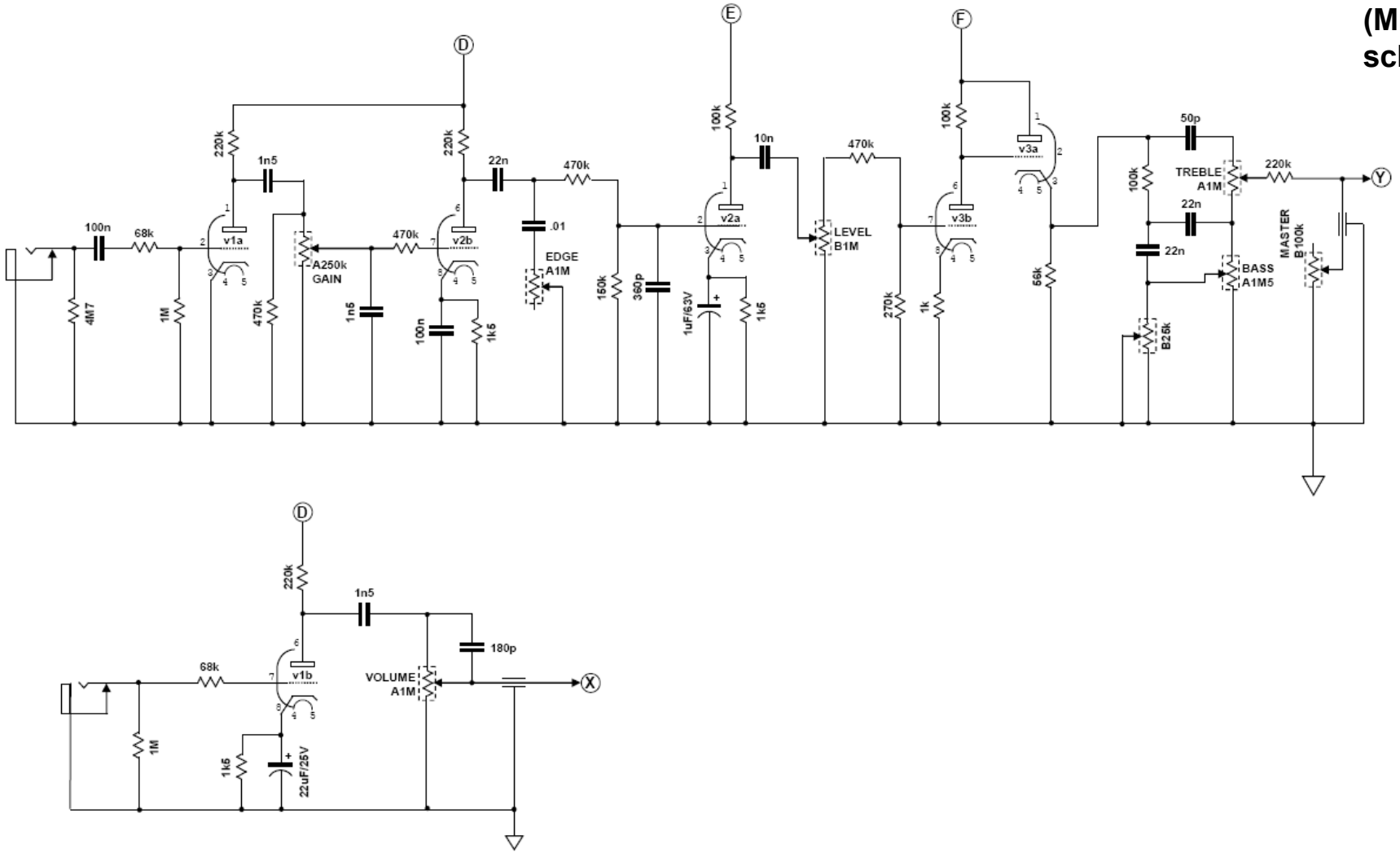

all coupling capacitors are metallized polyester film w/ 630V rating
all resistors are 1W carbon composition or metal film types
(note maximum voltage rating)

BADCAT HOTCAT (modified)		
30 watts all tube amplifier		
	Rev. 2.0	Page 1

20080316_Badhotsnake_Ver01.3.vsd

BadHotSnake

A BadCat HotCat 30HD Clone

Martin Dohrau, CH-8143 Stallikon

Version 1.3 Freitag, 4. April 2008

PowerAmp Circuitry (Mr. Class A) - original schema

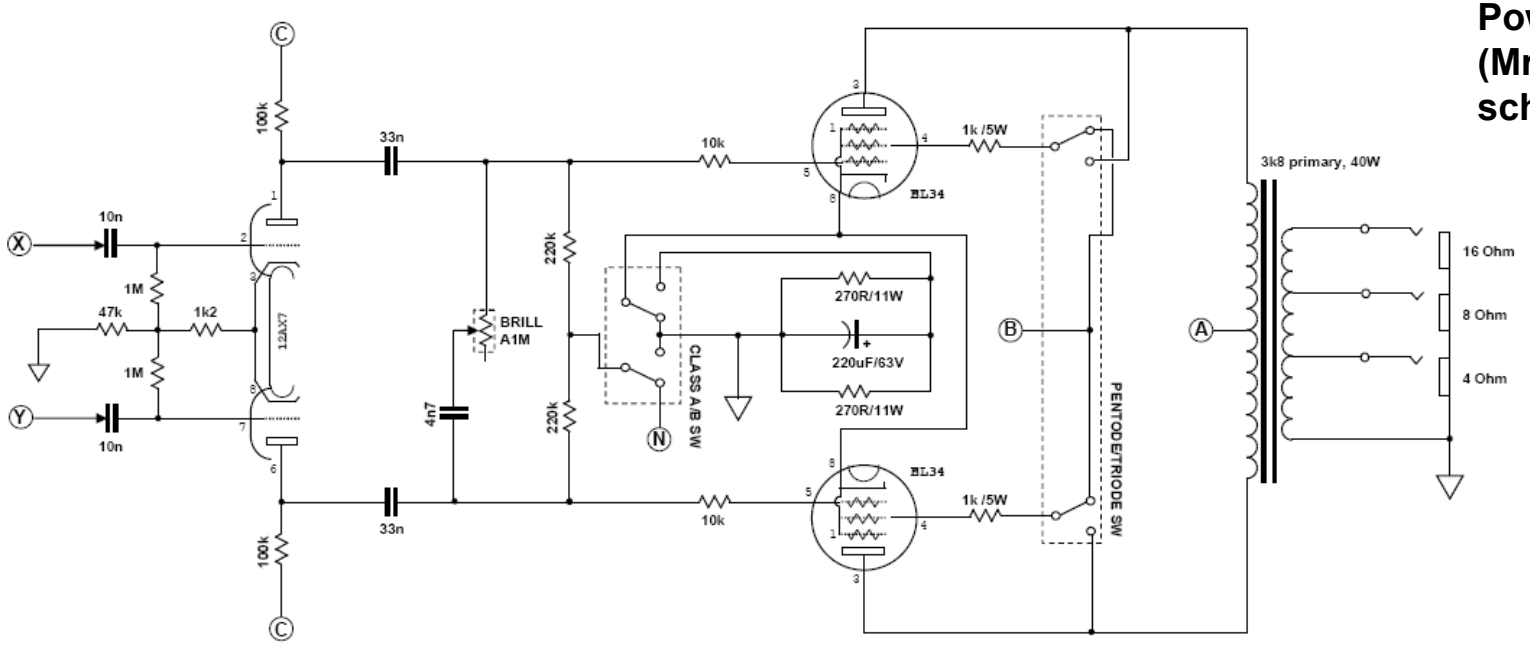

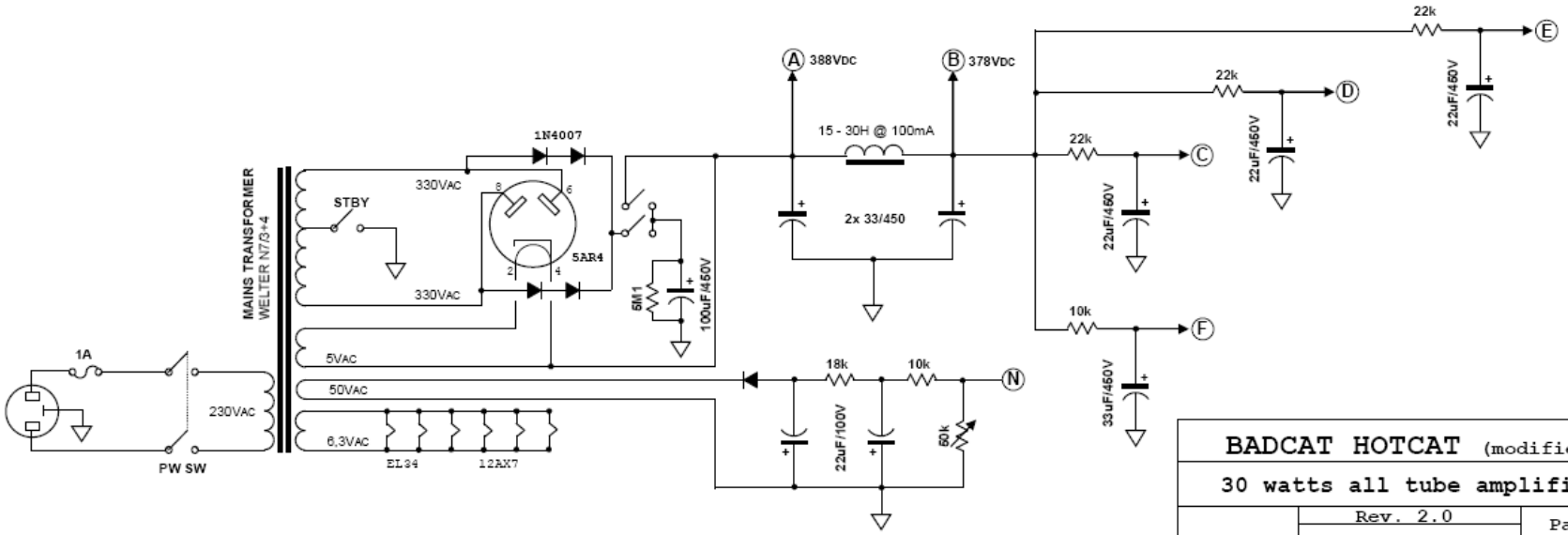

BADCAT HOTCAT (modified)		
30 watts all tube amplifier		
	Rev. 2.0	Page 2

20080316_Badhotsnake_Ver01.3.vsd

BadHotSnake

A BadCat HotCat 30HD Clone

Martin Dohrau, CH-8143 Stallikon

Version 1.3 Freitag, 4. April 2008

Shopping List 1-2

Schema ID#	Part			Maker		Vendor		Stück			
	Descriptor	Specification	Qty	MakerName	MakerPartID	VendorName	VendorPartID	EUR	CHF	EUR Pos	CHF Pos
J1	Mono Jack	Mono, switchable	1	Switchcraft		TT	sc-12b	2.90		2.90	-
J2	Mono Jack	Mono, switchable	1	Switchcraft		TT	sc-12b	2.90		2.90	-
J3-5	Mono Jack	Mono, switchable	3	Switchcraft		TT	sc-12b	2.90		8.70	-
J1a	Isolation part a for jacks	S1028	5	Switchcraft		TT	sc-s1028	0.50		2.50	-
J1b	Isolation part b for jacks	S1029	5	Switchcraft		TT	sc-s1029	0.50		2.50	-
V1	Preamp Tube	12AX7	1	JJ	ECC83S V1	TT	jj12ax7-v1	8.80		8.80	-
V1	Preamp Tube	12AX7	1	TT	TT12AX7(V1)	TT	tt12ax7-v1	10.00		10.00	-
V2	Preamp Tube	12AX7	1	JJ	ECC83S	TT	jj12ax7	5.95		5.95	-
V3	Preamp Tube	12AX7	1	JJ	ECC83S	TT	jj12ax7	5.95		5.95	-
V4	Preamp Tube	12AX7	1	JJ	ECC83S	TT	jj12ax7	5.95		5.95	-
V5	Power Tube	EL34	1	JJ	EL34	TT	jjel34l	11.70		11.70	-
V6	Power Tube	EL34	1	JJ	EL34	TT	jjel34l	11.70		11.70	-
V1-4 a	Tube Socket	Noval, Cearmics, Chassis + Shield	4			TT	sk01	1.60		6.40	-
V5-7	Tube Socket	Oktal, Ceramics, Chassis	3			TT	sk02	1.90		5.70	-
V5-6	Tube Retainer	for EL34 / 6L6	3			TT	re02	1.60		4.80	-
T1	Output Transformer	for plexi 50 marshall	1	Marshall /Dagnall	??	TT	tr-mot50	85.00		85.00	-
T2	Mains Transformer	360-340-320-0-320-340-360V - 220/220mA - 50V 100mA - 5V 3A - 6,3V 5,2A	1	Welter	N7/3+4	Welter	N7/3+4	69.50		69.50	-
L1	Choke	15mH/100mA	1	Hammond	M159M	TT	ha159m	18.25		18.25	-
R1	Resistor, 2W	4.7M, metal oxide	1	Vishay 0414 / 1%	4.7M, metal oxide, 1W	conrad.ch	420000 - 62		0.30	-	0.30
R2 R21	Resistor, 2W	68k, metal oxide	2	Vishay 0414 / 1%	68k, metal oxide, 1W	conrad.ch	419788 - 62		0.30	-	0.60
R3 R20 R25 R26	Resistor, 2W	1M, metal oxide	4	Vishay 0414 / 1%	1M, metal oxide, 1W	conrad.ch	419923 - 62		0.30	-	1.20
R4 R8 R19 R23 R30 R31	Resistor, 2W	220k, metal oxide	6	Vishay 0414 / 1%	220k, metal oxide, 1W	conrad.ch	419842 - 62		0.30	-	1.80
R5 R6 R9 R13	Resistor, 2W	470k, metal oxide	4	Vishay 0414 / 1%	470k, metal oxide, 1W	conrad.ch	419885 - 62		0.30	-	1.20
R7 R11 R22	Resistor, 2W	1.5k, metal oxide	3	Vishay 0414 / 1%	1.5k, metal oxide, 1W	conrad.ch	419583 - 62		0.30	-	0.90
R45	Resistor, 2W	100k, metal oxide	1		for standby-bleeding current					-	
R10	Resistor, 2W	150k, metal oxide	1	Vishay 0414 / 1%	150k, metal oxide, 1W	conrad.ch	419826 - 62		0.30	-	0.30
R12 R16 R18 R28 R29	Resistor, 2W	100k, metal oxide	5	Vishay 0414 / 1%	100k, metal oxide, 1W	conrad.ch	419800 - 62		0.30	-	1.50
R14	Resistor, 2W	170k, metal oxide	1	Vishay 0414 / 1%	150k, metal oxide, 1W 22k, metal oxide, 1W	conrad.ch	419826 - 62 419729 - 62			-	-
R15	Resistor, 2W	1k, metall oxide	1	Vishay 0414 / 1%	1k, metal oxide, 1W	conrad.ch	419567 - 62			-	-
R17	Resistor, 2W	56k, metal oxide	1	Vishay 0414 / 1%	56k, metal oxide, 1W	conrad.ch	419770 - 62		0.30	-	0.30

BadHotSnake

A BadCat HotCat 30HD Clone

Martin Dohrau, CH-8143 Stallikon

Version 1.3 Freitag, 4. April 2008

Shopping List 2-2

Schema ID#	Part			Maker		Vendor		Stück			
	Descriptor	Specification	Qty	MakerName	MakerPartID	VendorName	VendorPartID	EUR	CHF	EUR Pos	CHF Pos
R24	Resistor, 2W	47k, metal oxide	1	Vishay 0414 / 1%	47k, metal oxide, 1W	conrad.ch	419761 - 62		0.30	-	0.30
R27	Resistor, 2W	1.2k, metal oxide	1	Vishay 0414 / 1%	1.2k, metal oxide, 1W	conrad.ch	419575 - 62		0.30	-	0.30
R32 R33	Resistor, 2W	10k, metal oxide	2	Vishay 0414 / 1%	10k, metal oxide, 1W	conrad.ch	419680 - 62		0.30	-	0.60
R34 R35	Resistor, 11W	270R, metal oxide	2	HTR HEA Series	270R, wire wounds, 11W,	conrad.ch	411906 - 62		1.25	-	2.50
R36 R37	Resistor, 5W	1k, metall oxide	2	HTR HEA Series	1k, wire wound	conrad.ch	410357 - 62		1.25	-	2.50
R38	Resistor, 2W	5.1M, metal oxide	1	Vishay 0414 / 1%	4.7M, metal oxide, 1W 390k, metal oxide, 1W	conrad.ch	420000 - 62 419877 - 62		0.60	-	0.60
R39 R40 R41	Resistor, 2W	22k, metal oxide	3	Vishay 0414 / 1%	22k, metal oxide, 1W	conrad.ch	419729 - 62		0.30	-	0.90
R42	Resistor, 2W	10k, metal oxide	1	Vishay 0414 / 1%	10k, metal oxide, 1W	conrad.ch	419680 - 62		0.30	-	0.30
R43 R44	Resistor, 2W	18k, metal oxide	2	Vishay 0414 / 1%	18k, metal oxide, 1W	conrad.ch	419710 - 62		0.30	-	0.60
VR01	Potentiometer	250k, audio, log	1	Alpha	24mm	TT	apo250log-m	1.30		1.30	-
VR02 VR08 VR09 VR05 VR06	Potentiometer	1M, audio, log	5	Alpha	24mm	TT	apo1m-log	1.30		6.50	-
VR03	Potentiometer	1M, linear	1	Alpha	24mm	TT	apo1m	1.30		1.30	-
VR04	Potentiometer	25k, B	1	Alpha	24mm	TT	apo25	1.30		1.30	-
VR07	Potentiometer	100k, linear	1	Alpha	24mm	TT	apo100	1.60		1.60	-
VR10	Potentiometer	50k, linear	1	Alpha	16mm	TT	apo16-50	1.20		1.20	-
C1 C4	Capacitor	100nF	2	Roederstein MKT	0.1uF/400VDC	TT	croe1-mkt	0.39		0.78	-
C5 C10 C12	Capacitor	22nF	3	Roederstein MKT	0.022uF/400VDC	TT	croe022-mkt	0.35		1.05	-
C9 C16 C17	Capacitor	10nF	3	Roederstein MKT	0.010uF/400VDC	TT	croe01-mkt	0.40		1.20	-
C18 C19	Capacitor	33nF	2	Vishay Orange Drops	0.033uF/600VDC	TT	rcrd033	1.05		2.10	-
C2 C3 C14	Capacitor	1.5nF / Polypropylen	3	Philips	1500pF/630VDC	Conrad	458821 - 62		0.80	-	2.40
C7	Capacitor	360pF	1	Silver Mica	360pF	TT	csm360			-	
C2 C3 C14	Capacitor	1.5nF / Polypropylen	3	Silver Mica	1000pF/630VDC 500pF/630VDC	TT	csm1000 csm500	0.61		1.83	-
C20	Capacitor	4.7nF /Polypropylen	1	Philips	4700pF/630VDC	Conrad	458880 - 62		0.80	-	0.80
C20	Capacitor	4.7nF /Polypropylen	1	Mallory 150	0.047uF/630VDC	TT	cma0047	1.20		1.20	-
C11	Capacitor	50pF/Polyproylen	1	Philips	47pF/630VDC	Conrad	458643 - 62		0.65	-	0.65
C11	Capacitor	50pF/Polyproylen	1	Silver Mica	47pF/630VDC	TT	csm47	0.50		0.50	-
C15	Capacitor	180pF/Polypropylen	1	Philips	180pF/630VDC	Conrad	458716 - 62		0.65	-	0.65
C6	Capacitor	0.01nF	1	Silver Mica	10pF/600VDC	TT	csm10	0.26		0.26	-
C23	Electrolytic Capacitor	2x33uF/450DC	1	F+T	33+33uF/450VDC	TT	cft-33-33-450	10.85		10.85	-
C23	Electrolytic Capacitor	33uF/450DC	1		33uF/450VDC	TT	cax-33-450	1.30		1.30	-
C30 C31	Electrolytic Capacitor	22uF/100V	2	Marcon							-
C8	Electrolytic Capacitor	1uF/63V	1	F+T	1uF/100VDC	TT	cft-1-100	0.32		0.32	-
C24 C25 C26 C28 C29	Electrolytic Capacitor	22uF&450VDC	5	F+T	22uF/450VDC	TT	cft-22-450	1.20		6.00	-
C22	Electrolytic Capacitor	100uF/450VDC	1	F+T	100uF/450VDC	TT	cft-100-450	9.70		9.70	-
C21	Electrolytic Capacitor	220uF/63VDC	1		220uF/63VDC	TT	cax-220-63	1.07		1.07	-
C27	Electrolytic Capacitor	33uF/450VDC	1		33uF/450VDC	TT	cax-33-450	1.30		1.30	-
VRx	Chickenhead Knob	6.3mm diameter	10			TT	kch-s	0.90		9.00	-
	Chassis	approx> 430x230x58	1	Hammond	AL1444-30 / Alu	TT	AL 1444-30	19.45		19.45	-
	amp chassis	large for AL1444-30	1	TT		TT	tt-hsb-l	149.00		149.00	-
	Fuse holder									-	-
	Silicon Isolierschlauch	1mm Innendurchmesser	10	DSG-Canusa		conrad.ch	608092 - 62		1.00	-	10.00
										499.31	31.20

CHF 749.57